Tmax Ts3

DOC. N.° 1SDH000638R0001 - L3557

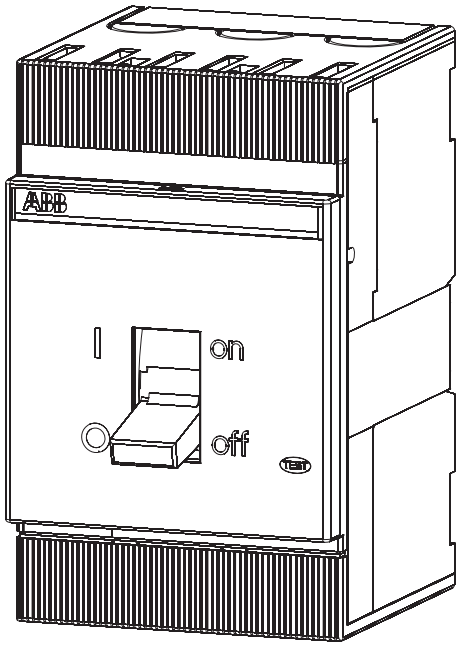

A

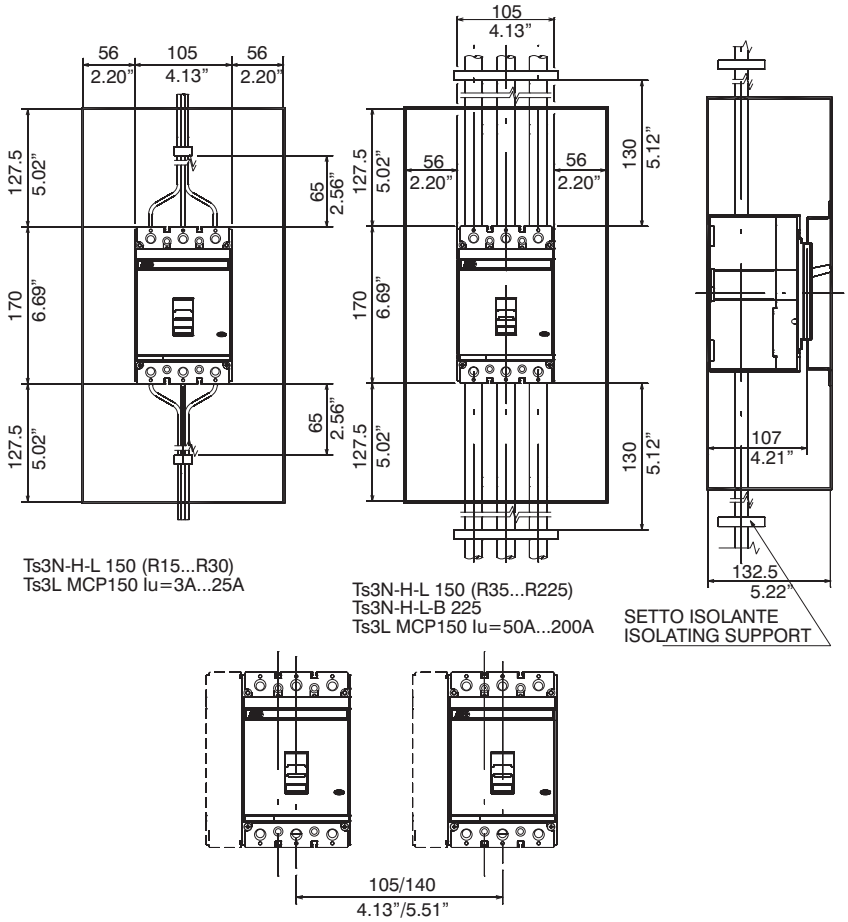

B

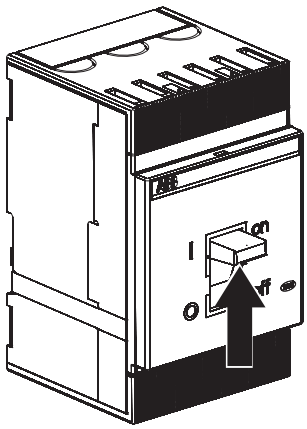

ON

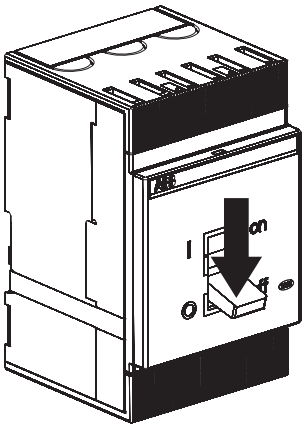

OFF

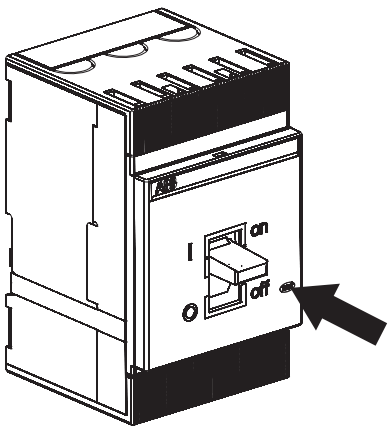

TRIPPED

C

F-RC CuAl

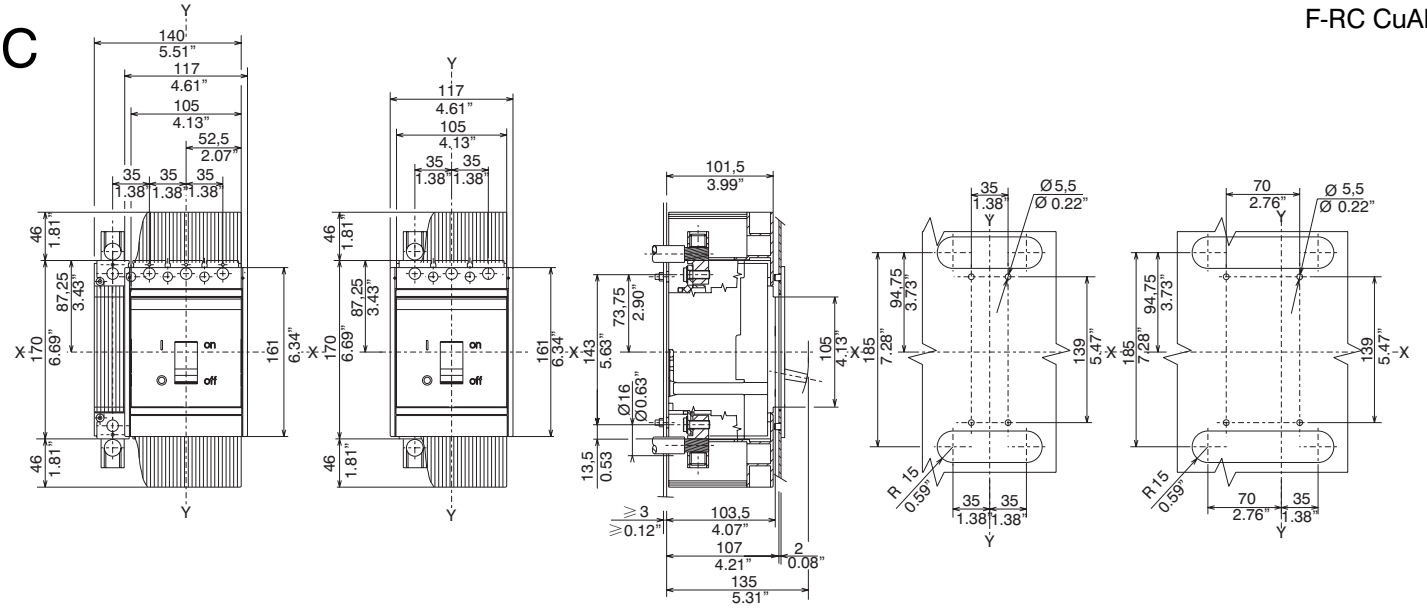

D

F-FC CuAl
225A

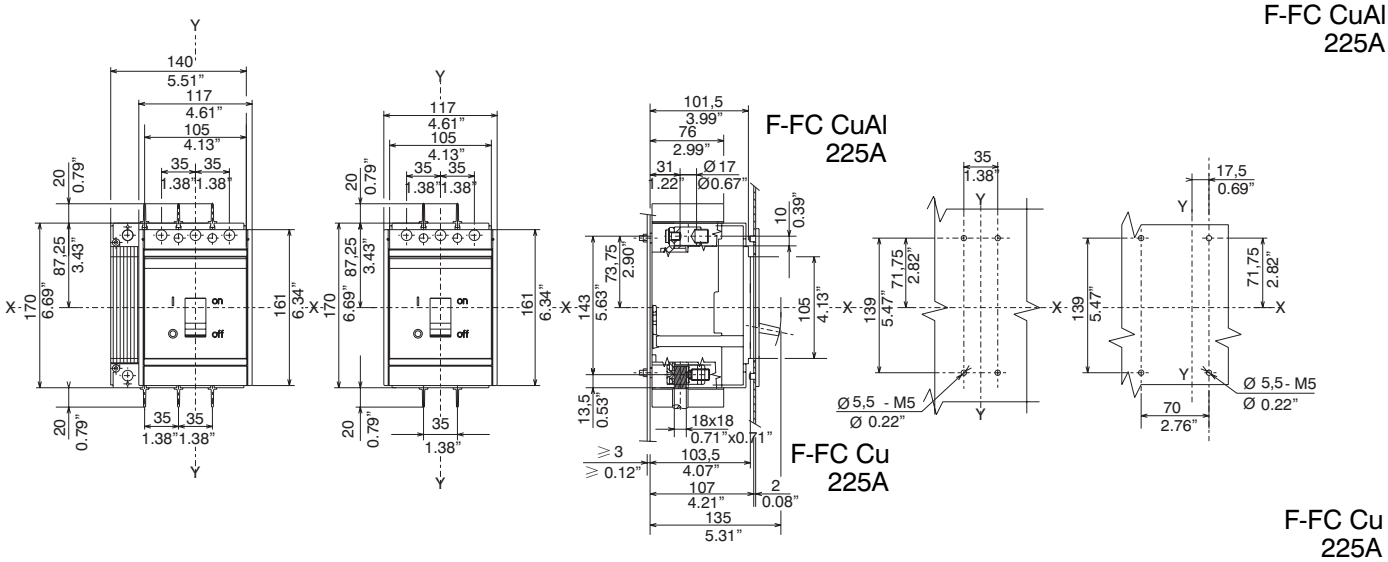

F-FC Cu
225A

E

F-FC CuAl
100A

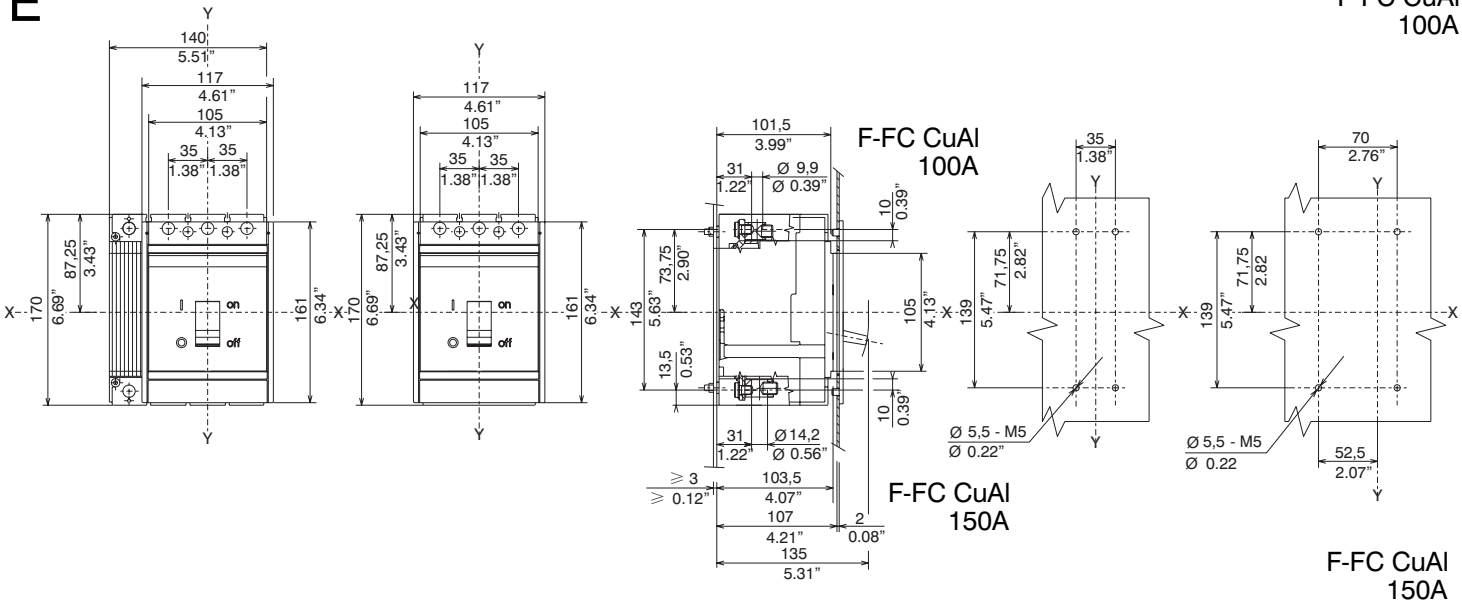

F-FC CuAl
150A

ABB

F

F-EF

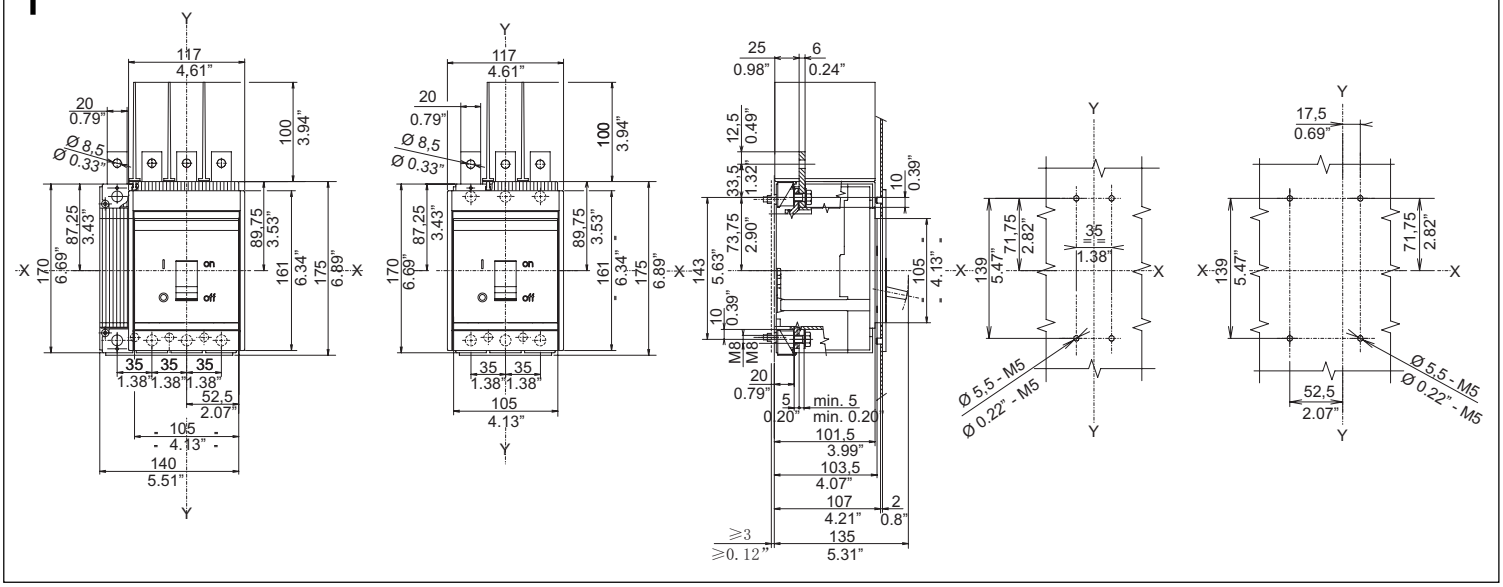

G

F-R

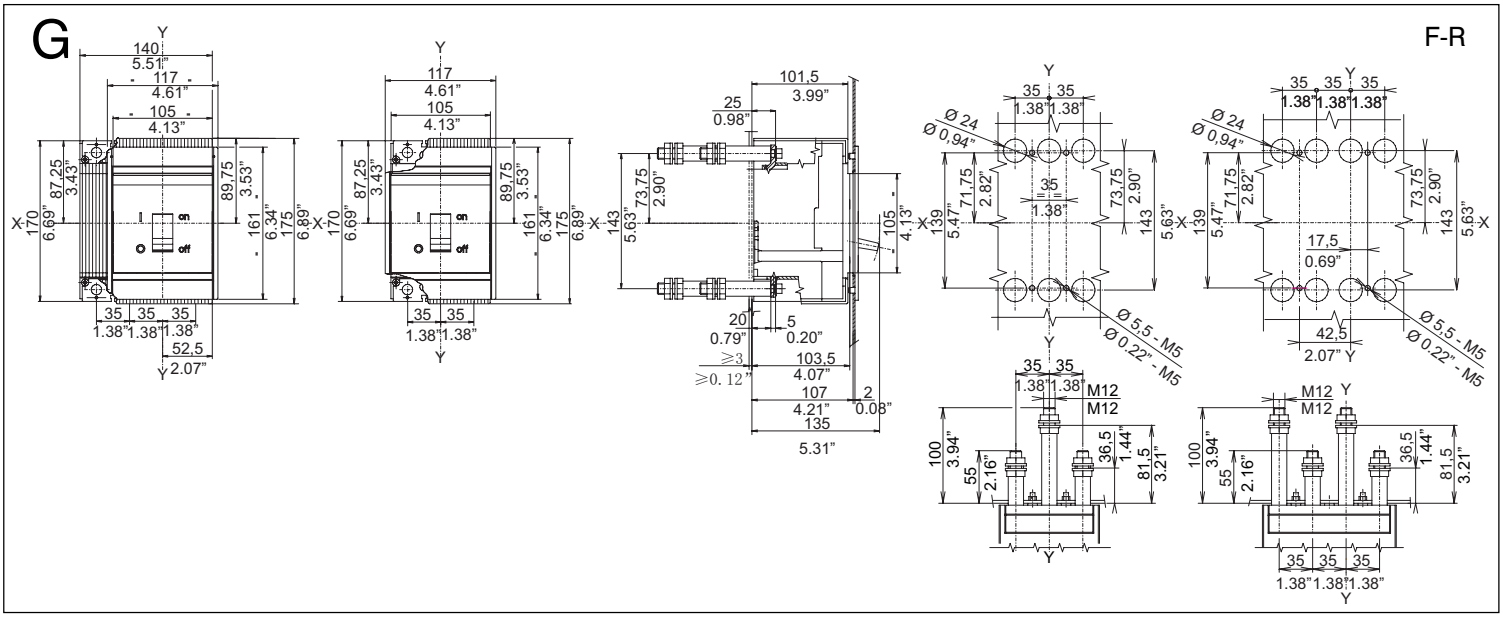

H

F-ES

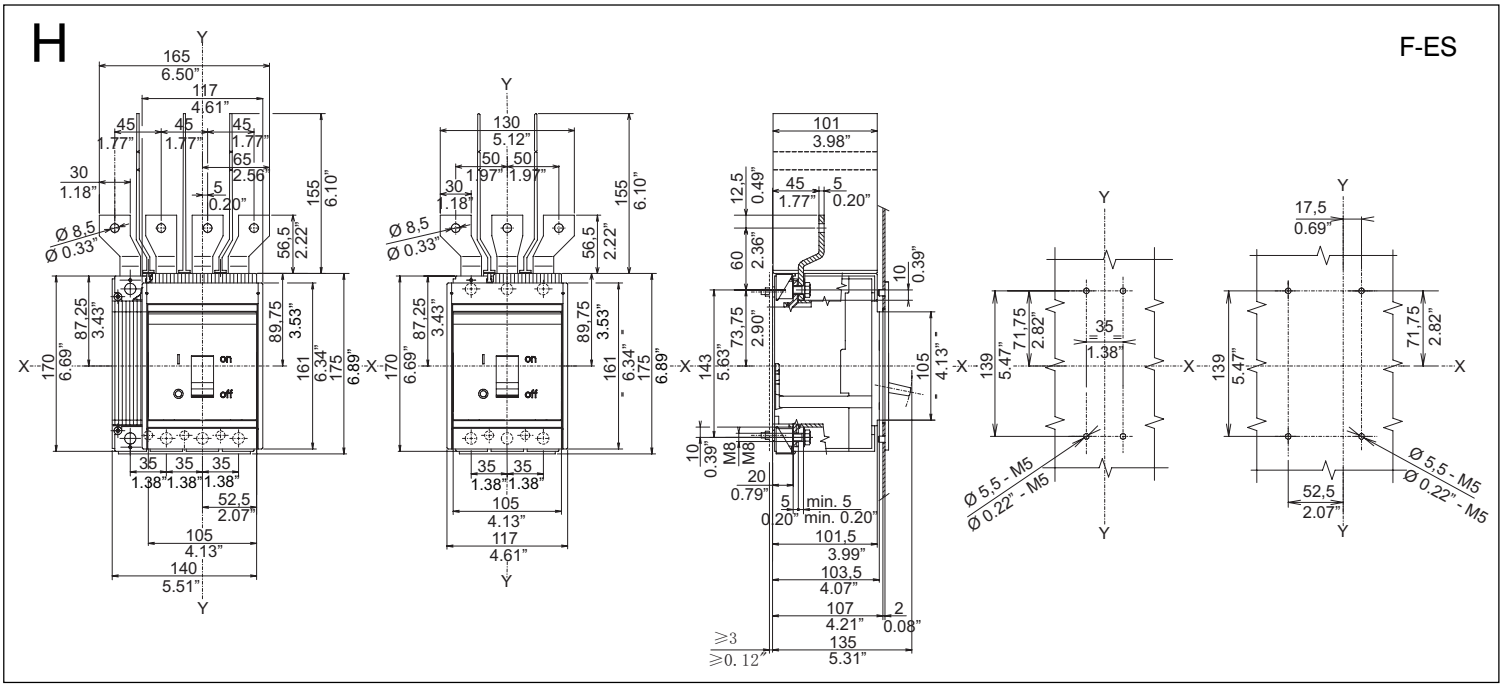

I

P-EF

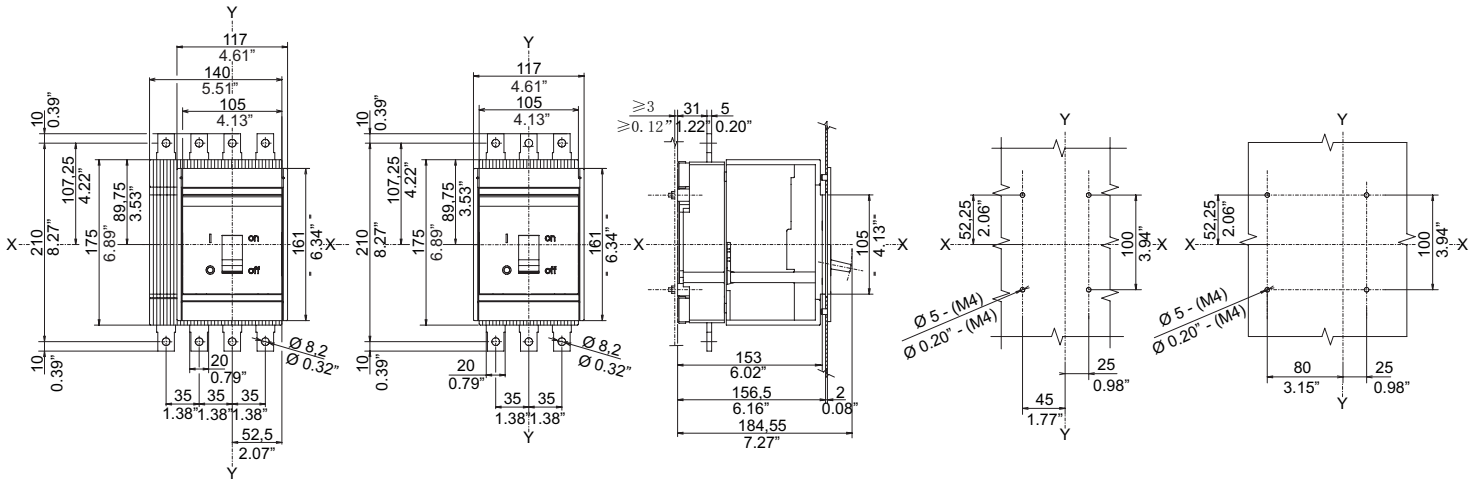

L

P-R

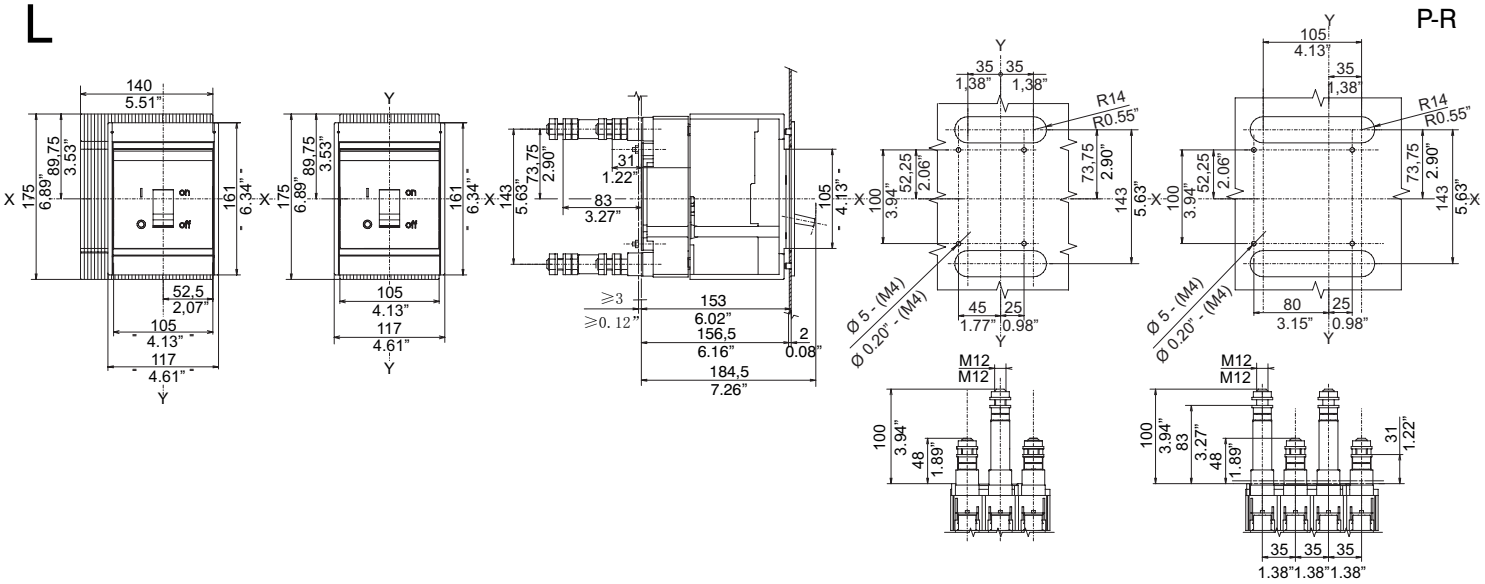

M

P-RC Cu Al

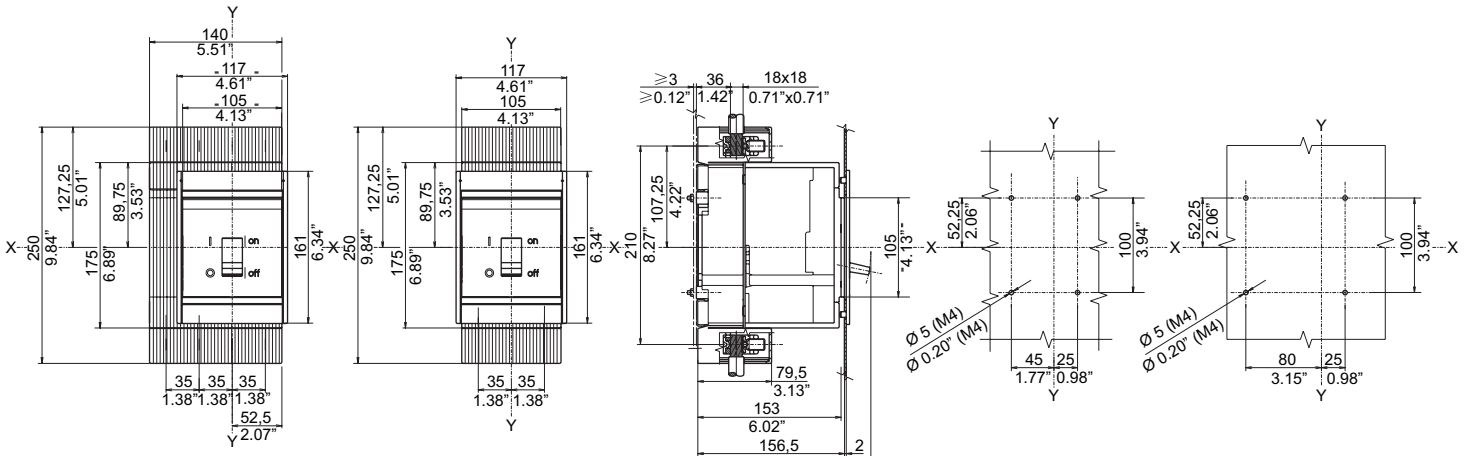

N

W-EF

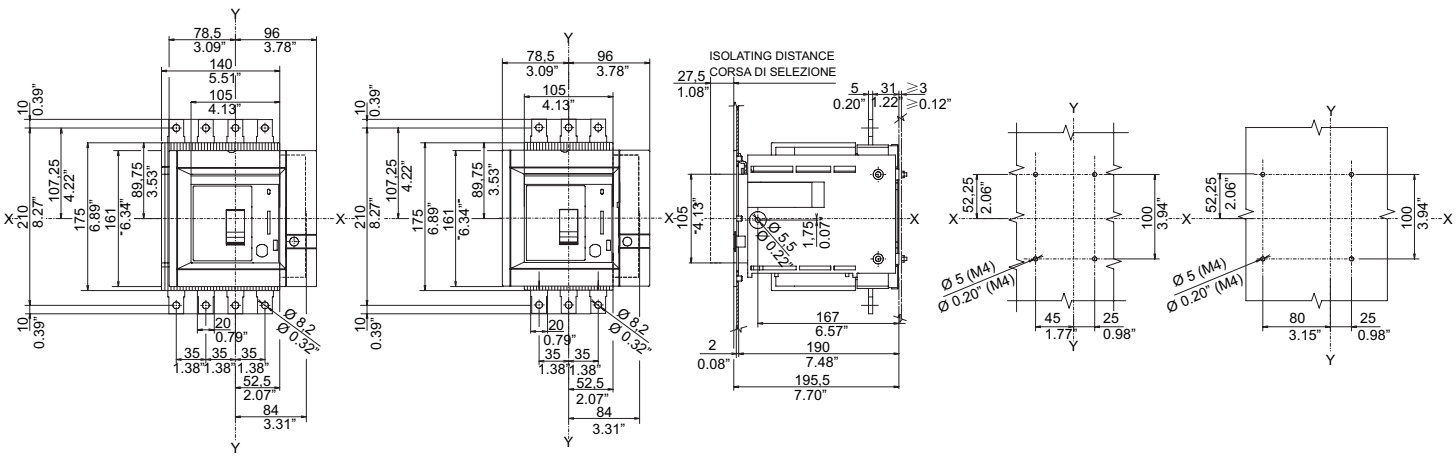

O

W-R

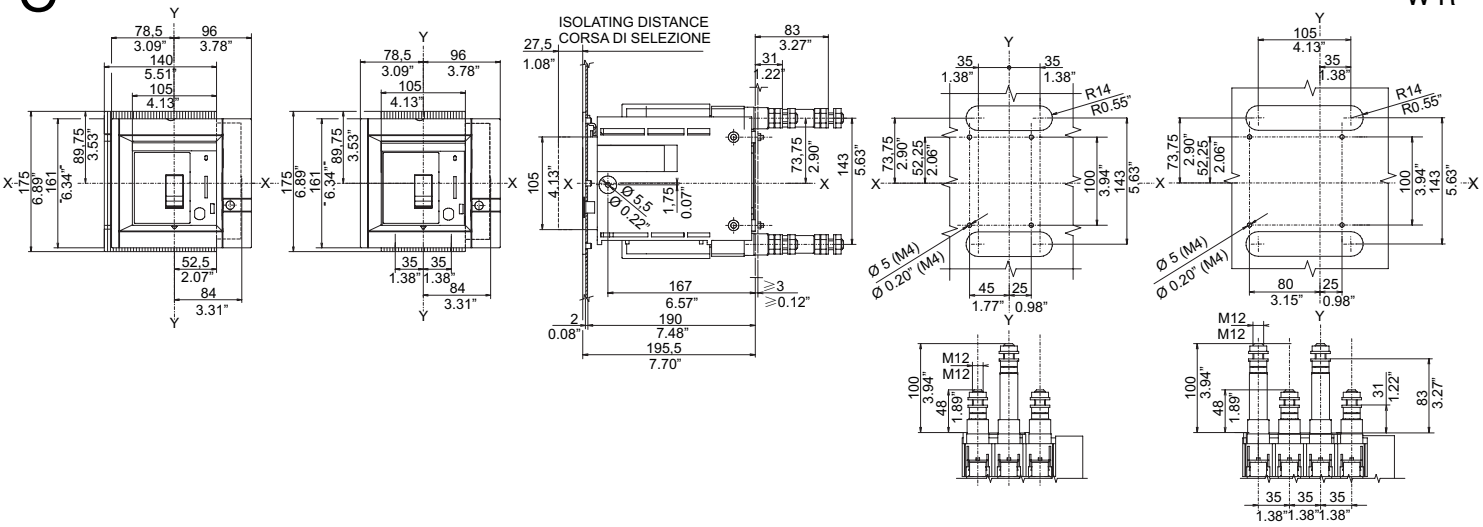

P

W-RC Cu Al

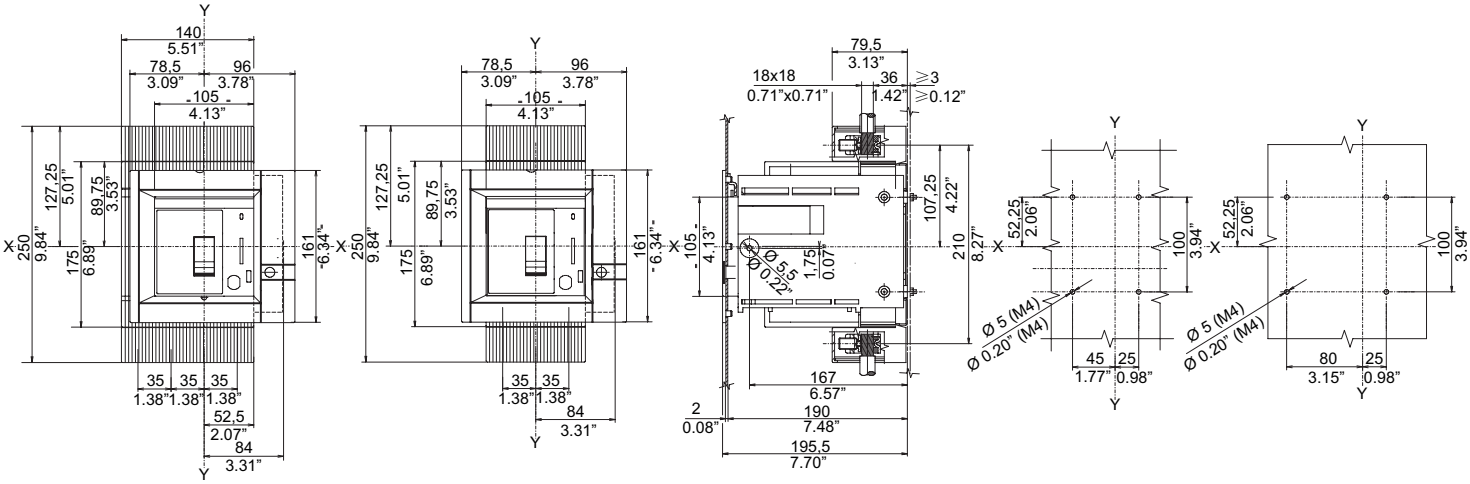

Q

F

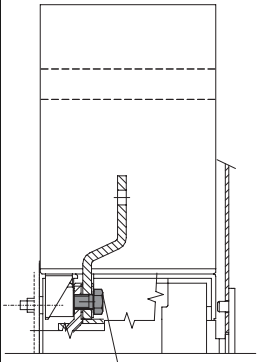
F-ES
9 Nm
70 lb in

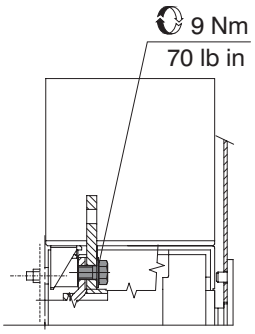
9 Nm
70 lb in
F-EF

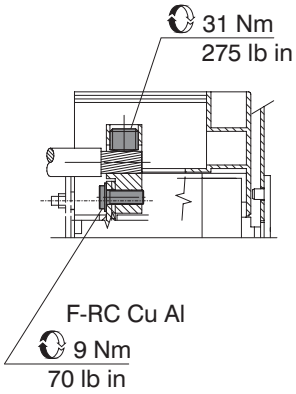
31 Nm
275 lb in
F-RC Cu Al
9 Nm
70 lb in

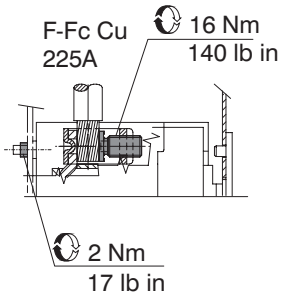
F-Fc Cu
225A
16 Nm
140 lb in
2 Nm
17 lb in

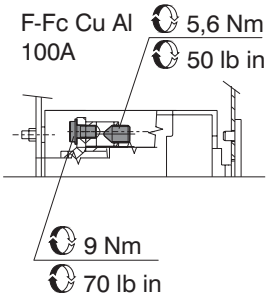
F-Fc Cu Al
100A
5,6 Nm
50 lb in
9 Nm
70 lb in

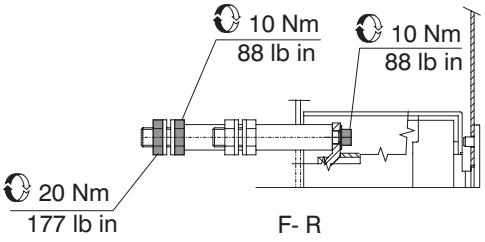
10 Nm
88 lb in
10 Nm
88 lb in
20 Nm
177 lb in
F- R

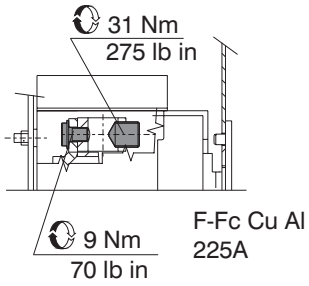
31 Nm
275 lb in
9 Nm
70 lb in
F-Fc Cu Al
225A

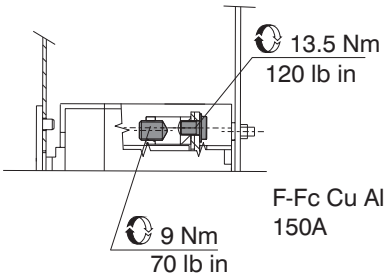
13.5 Nm
120 lb in
9 Nm
70 lb in
F-Fc Cu Al
150A

P

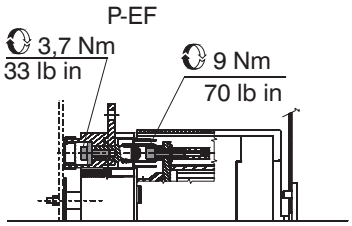
P-EF
3,7 Nm
33 lb in
9 Nm
70 lb in

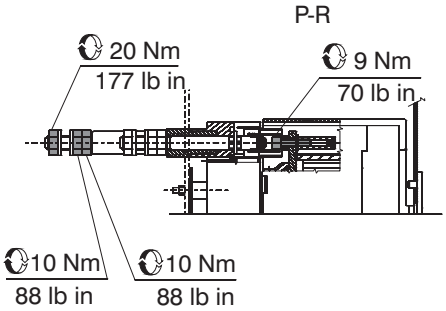
P-R
20 Nm
177 lb in
9 Nm
70 lb in
10 Nm
88 lb in
10 Nm
88 lb in

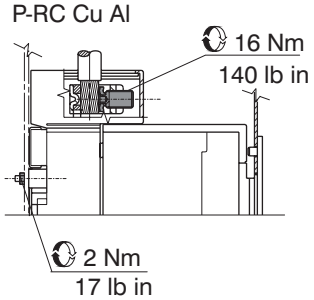
P-RC Cu Al
16 Nm
140 lb in
2 Nm
17 lb in

W

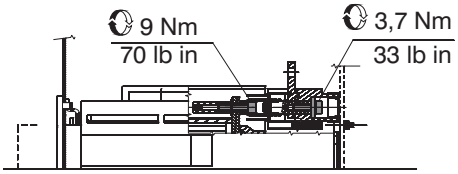
9 Nm
70 lb in
3,7 Nm
33 lb in
W-EF

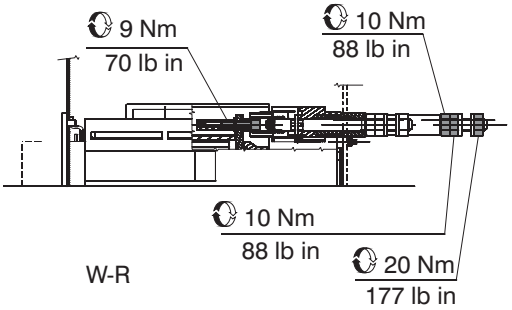
9 Nm
70 lb in
10 Nm
88 lb in
10 Nm
88 lb in
20 Nm
177 lb in
W-R

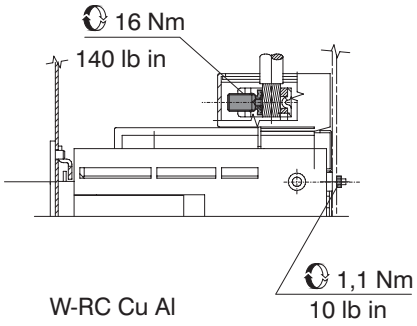
16 Nm
140 lb in
1,1 Nm
10 lb in
W-RC Cu Al

R

W

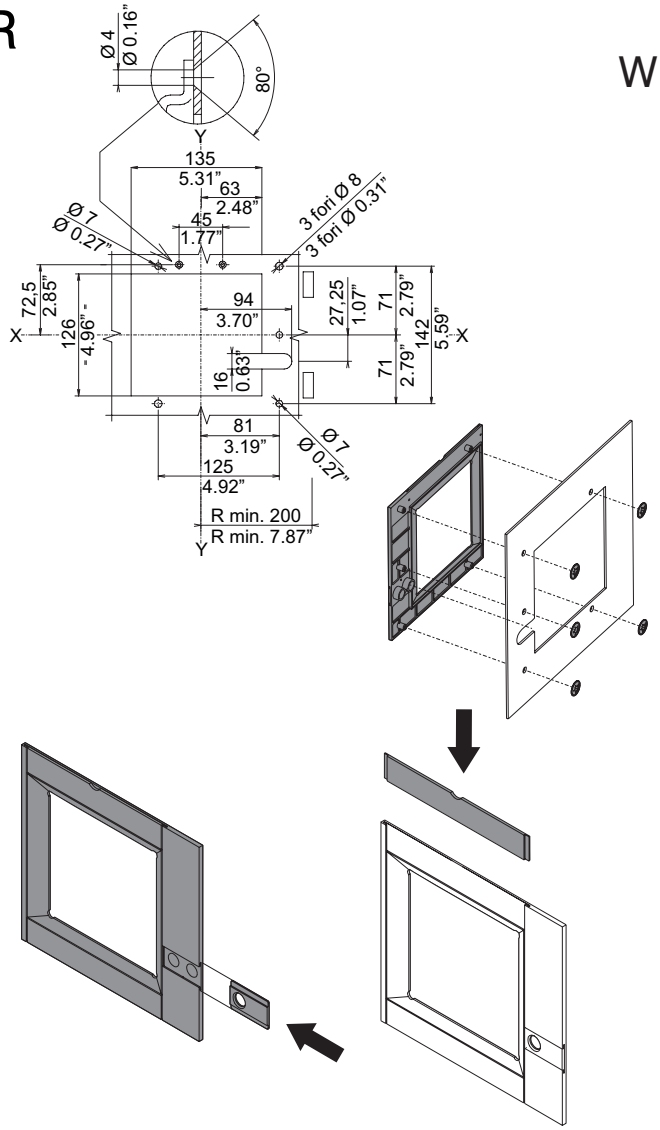
Ø 4
Ø 0.16"
80°
Y
135
5.31"
63
2.48"
45
1.77"
Ø 7
Ø 0.27"
3 fori Ø 8
3 fori Ø 0.31"
72,5
2.85"
126
4.96"
X
94
3.70"
27,25
1.07"
71
2.79"
142
5.59"
16
0.63"
81
3.19"
125
4.92"
R min. 200
R min. 7.87"

F-P

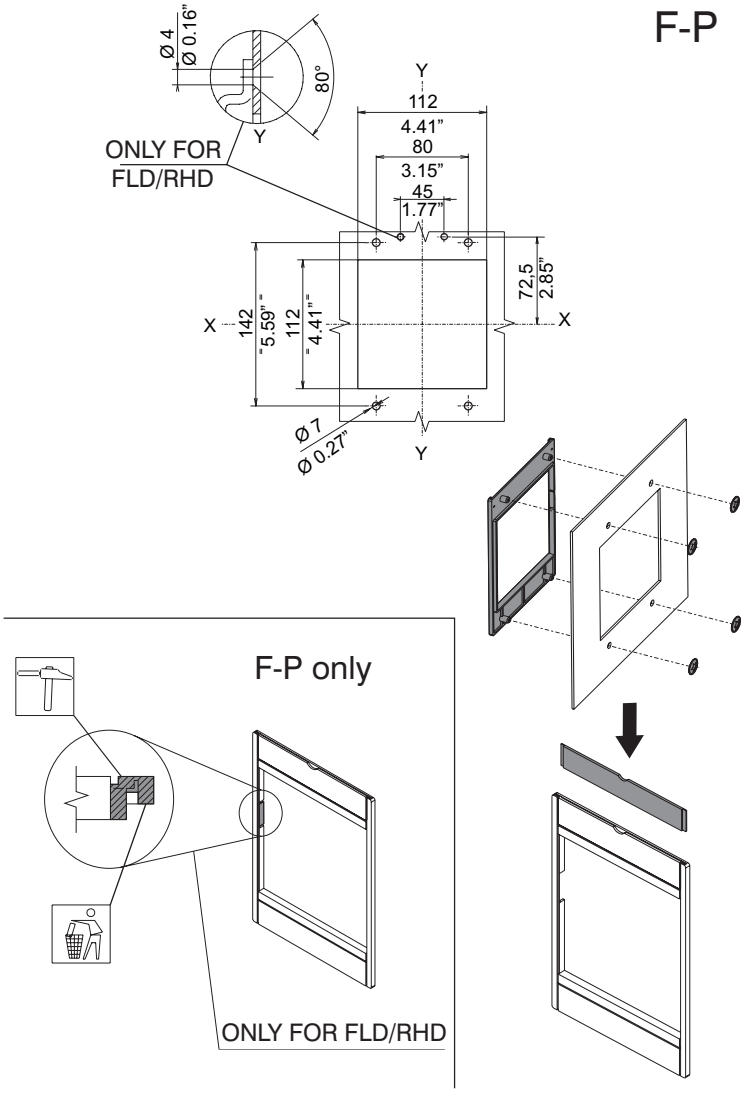
Ø 4
Ø 0.16"
80°
Y
ONLY FOR
FLD/RHD
112
4.41"
80
3.15"
45
1.77"
X
142
5.59"
112
4.41"
72,5
2.85"
Ø 7
Ø 0.27"
F-P only
ONLY FOR FLD/RHD

S

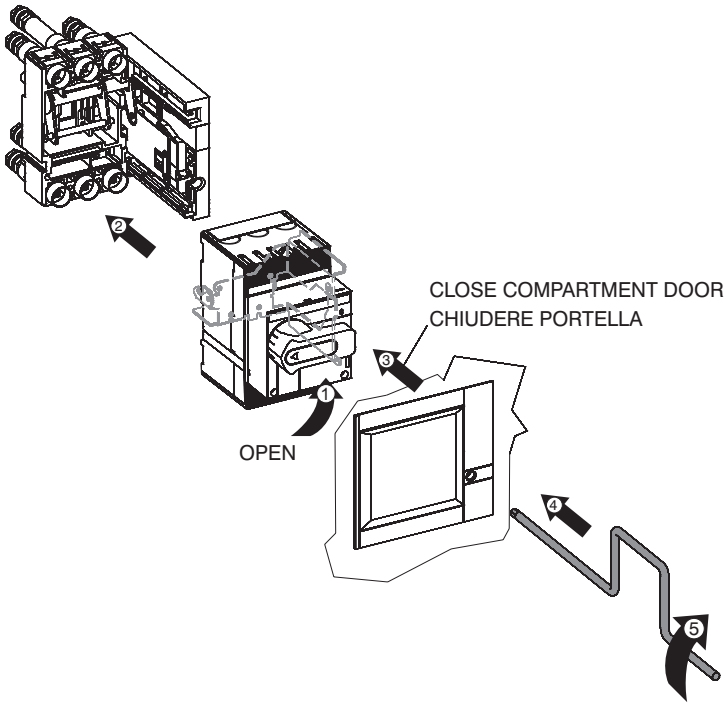
CLOSE COMPARTMENT DOOR
CHIUDERE PORTELLA
OPEN

T

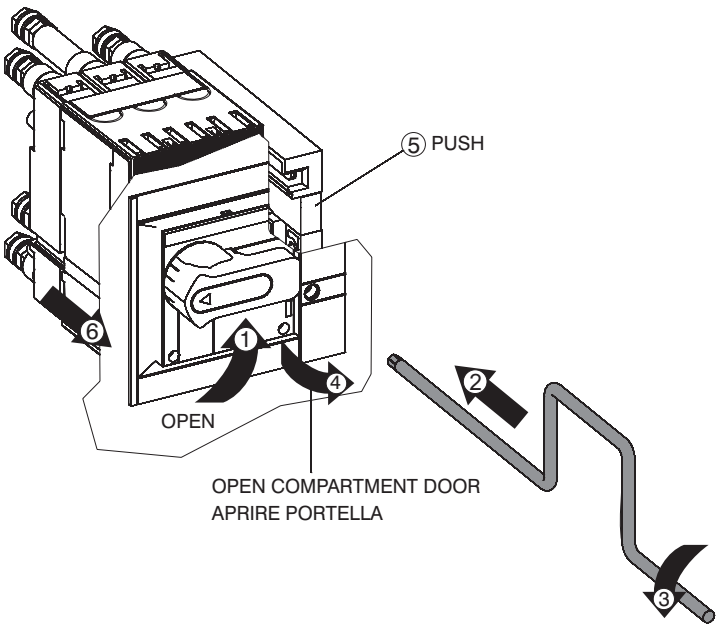
5 PUSH
OPEN
OPEN COMPARTMENT DOOR
APRIRE PORTELLA

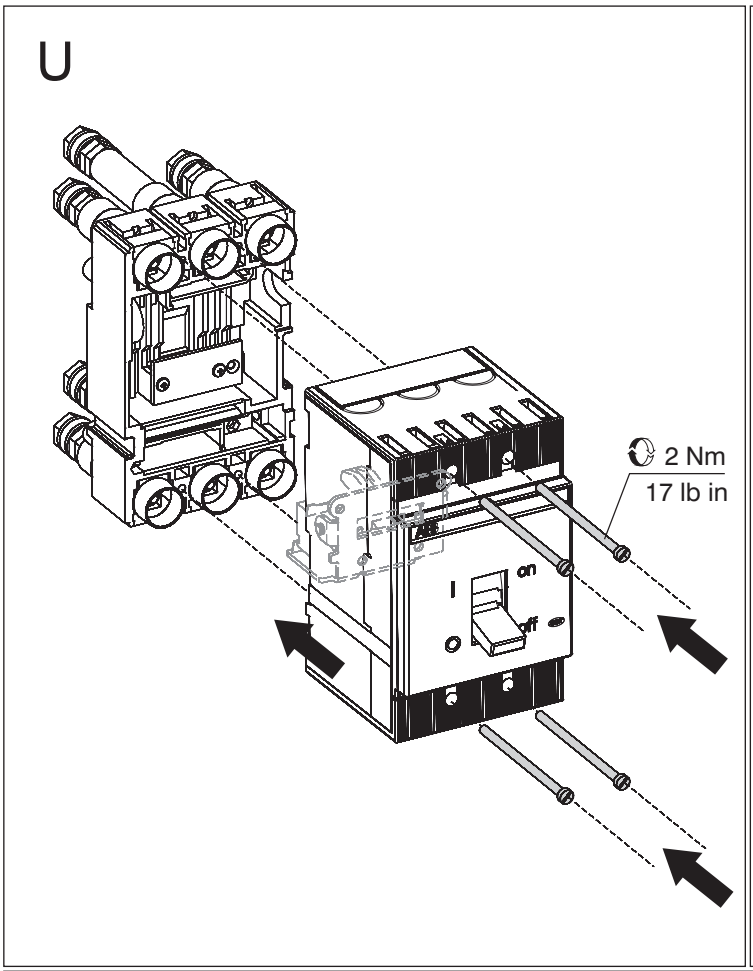

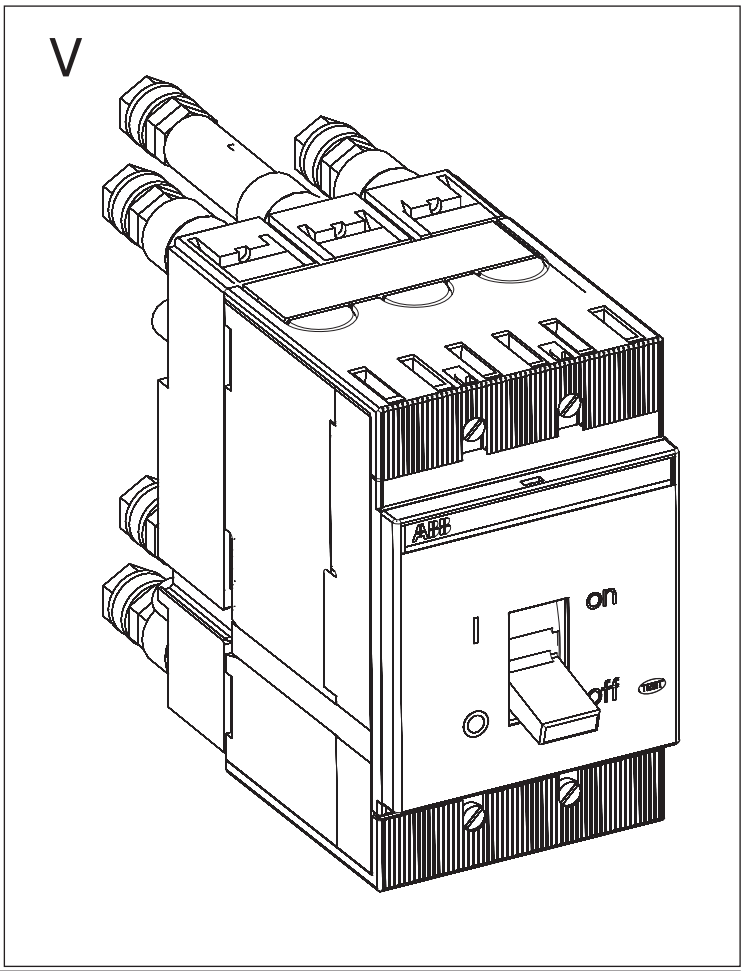

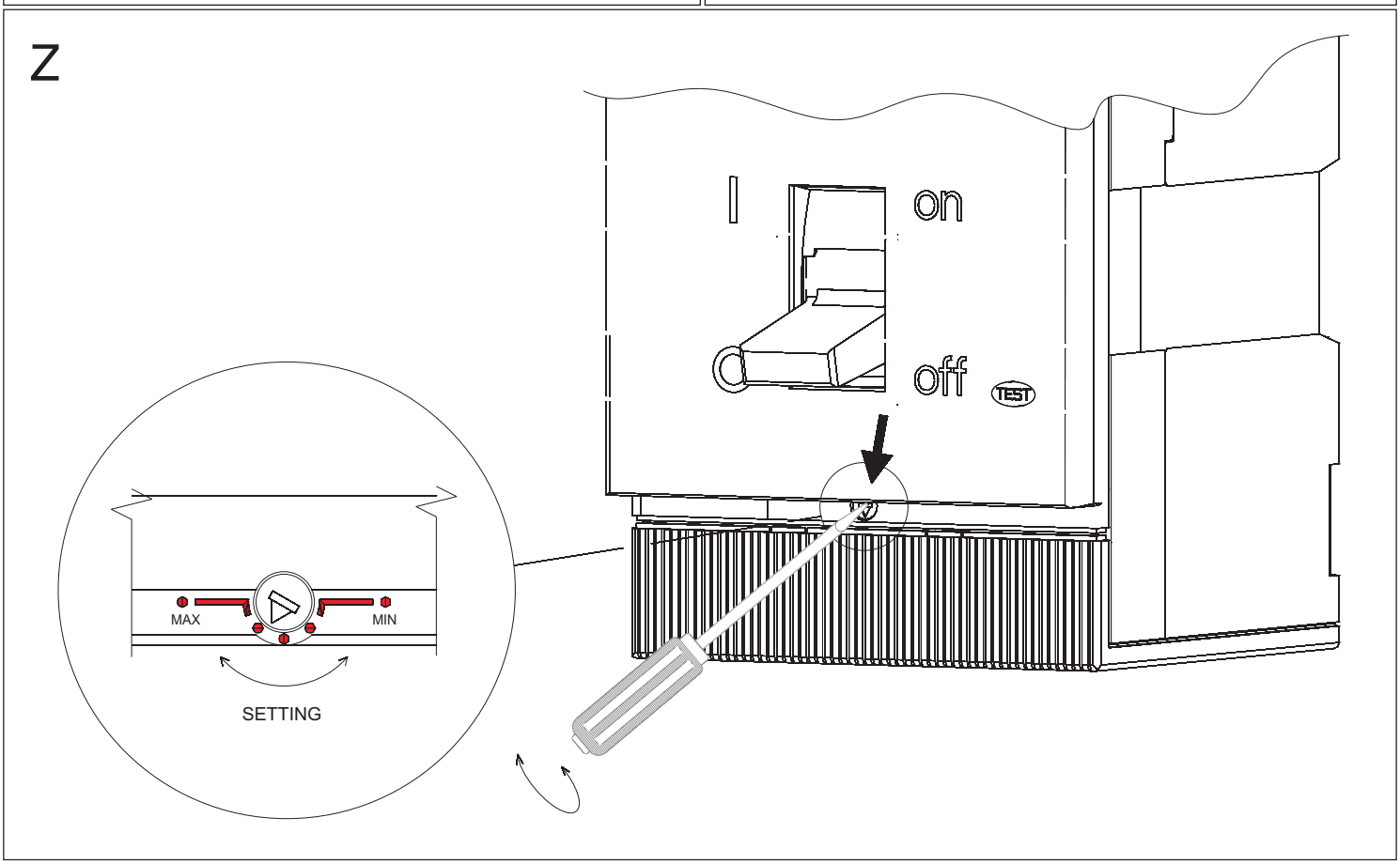

ABB SACE S.p.A.
Via Baioni, 35
24123 Bergamo Italy
Tel.: +39 035 395.111 - Telefax: +39 035 395.306-433

http://www.abb.com