1

Overload Fitted Directly to the Contactor

Frame B (7–15A)

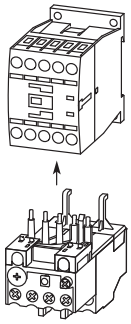

Frame C (18–32A)

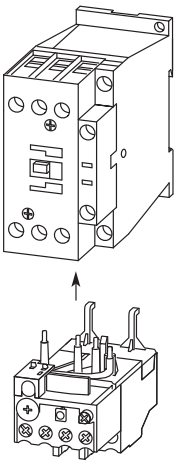

Frame D (40–72A)

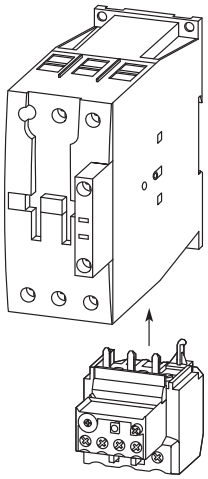

Frames F–G (80–170A)

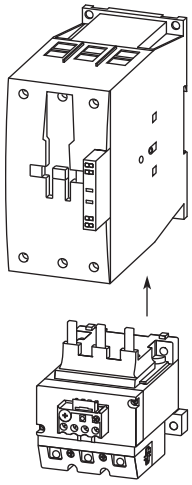

Frames H–L (185–250A)

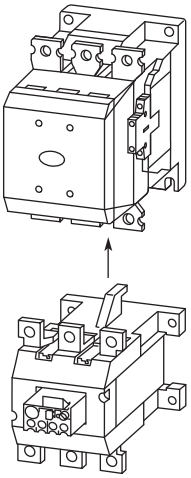

Overload Mounted Separately from the Contactor

Frame C (18–32A)

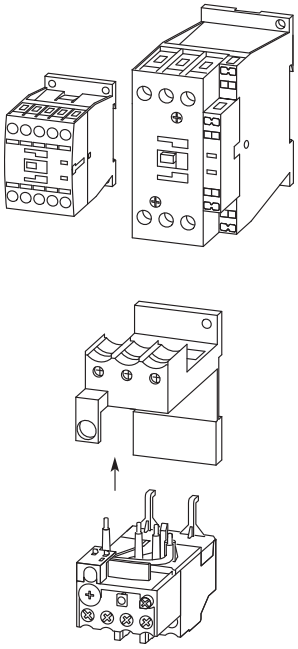

Frame D (40–72A)

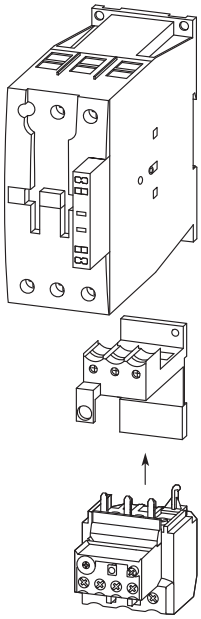

Frames F–G (80–170A)

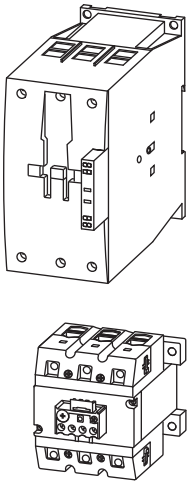

Frames H–L (185–250A)

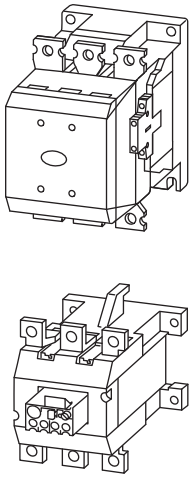

Tripping Characteristics

These tripping characteristics are the mean values of the spread at 20°C ambient temperature in a cold state.

Tripping time depends on response current. With devices at operating temperature, the tripping time of the overload relay reduces to approximately 25% of the read off value. Specific characteristics for each individual setting range can be found in MN03402001E.

XTOB...BC1, XTOB...CC1, XTOB...DC1

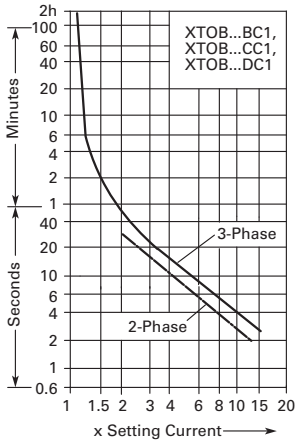

XTOB...GC1

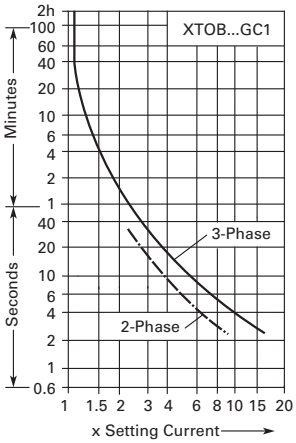

XTOB...HC1, XTOB...LC1

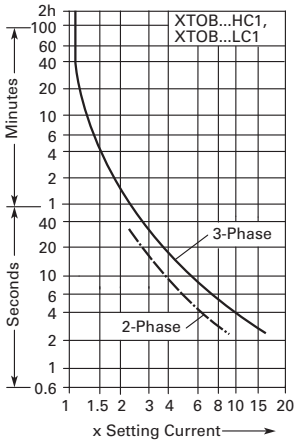

Dimensions

Approximate Dimensions in mm [in]

Frames B–C, XTOB...BC1 and XTOB...CC1 Overload Relays

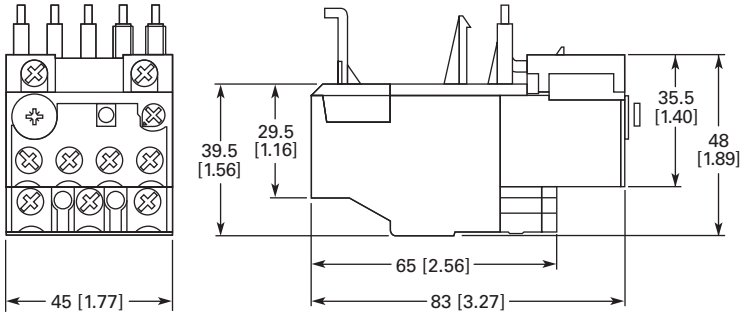

Frame D, XTOB...DC1 Overload Relay

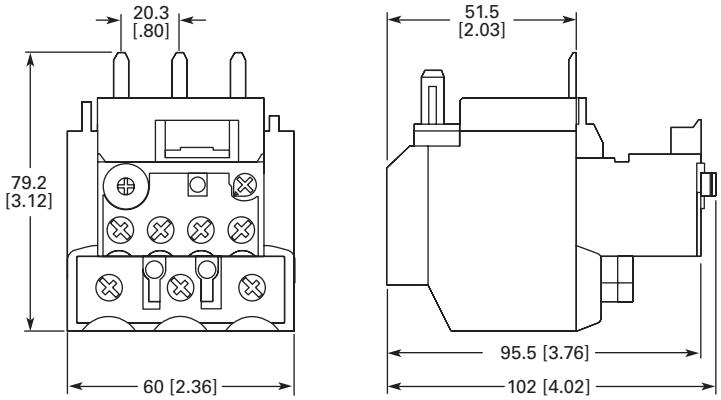

Approximate Dimensions in mm [in]

Frames B–C, XTOBXDINC DIN Rail or Panel Mount Adapter and Frame D, XTOBXDIND DIN Rail or Panel Mount Adapter

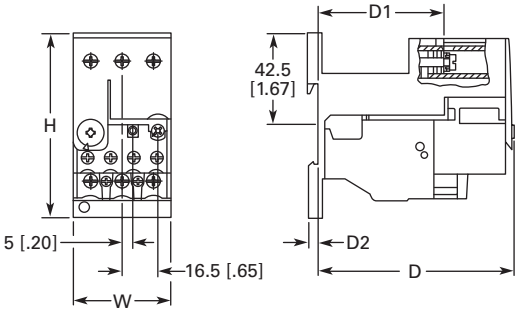

	H	W	D	D1	D2
XTOB...CC1	85 [3.46]	45 [1.77]	90.5 [3.56]	58.3 [2.30]	3.8 [.15]
XTOB...DC1	86 [3.39]	60 [2.36]	112 [4.41]	80.5 [3.17]	4.7 [.19]

Frames F–G, XTOB...GC1 Overload Relay

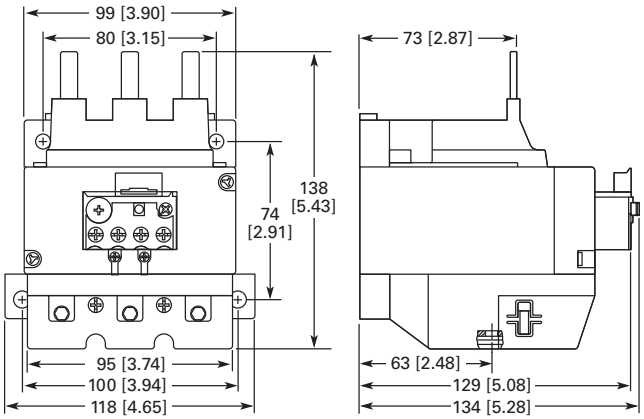

Frames F–G, XTOB...G1CS Overload Relay

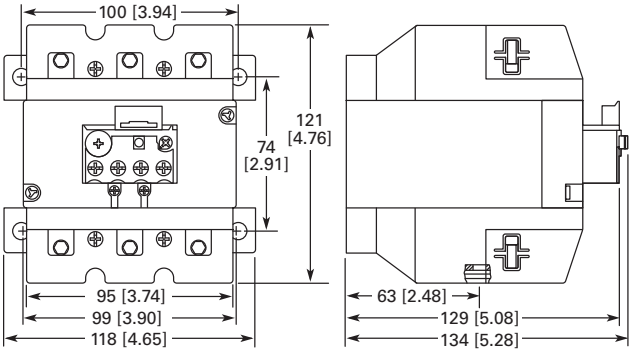

Approximate Dimensions in mm [in]

Frames L and H, XTOB…LC1, HC1 Overload Relay

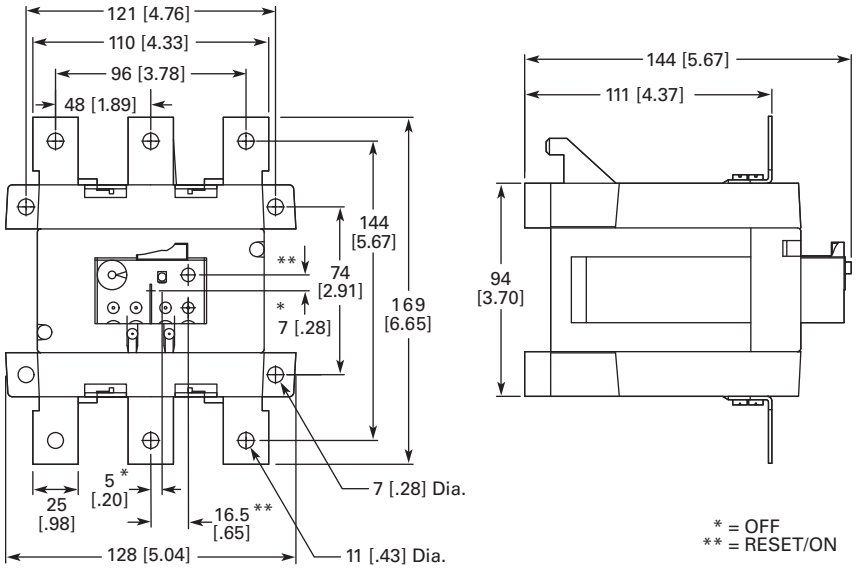
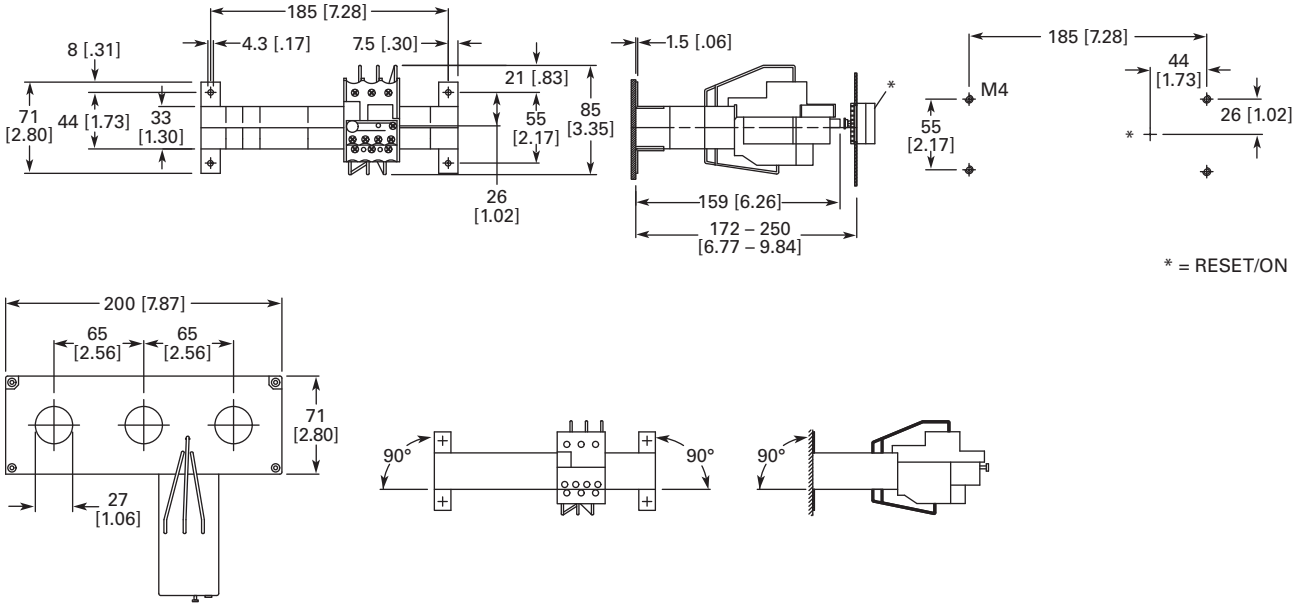
XTOT…C3S Current Transformer Operated Overload Relay