Data sheet

Thermostatic Expansion Valves Type TR 6

Introduction
The TR 6 series is a hermetic tight design, designed and developed with features especially for use in applications such as:

- Residential air conditioning systems
- Split systems
- Roof top units
- Heat pumps
- Light commercial air conditioning systems
- Chillers

The TR design incorporates a hot-pressed brass body with the entire power element, including the capillary tube and bulb, fabricated from stainless steel. All valves are designed with balanced port which reduces the influence from varying condensing pressures. The valves can be delivered with special connections and fittings both at the inlet and outlet and at the equalizer connection.

Features

- Compact size - hermetic design
- Refrigerants & rated capacities ranging up to
  - R22: 6.7 TR / 23.6 kW
  - R410A: 7 TR / 24.5 kW
  - Others on request
- Laser-welded power element
  - Longer diaphragm life.
  - High pressure tolerance and working pressure.
- Stainless steel capillary tube
  - Tolerates more bending for easier installation and longer life.
  - High strength and vibration resistance.
- Stainless steel bulb
  - Self-aligning for fast and easy installation; secures with a single bulb strap/OEM strap
  - More contact surface for better heat transfer
- Balance port design
- A complete program with internal check valve with low pressure drop at full flow or without internal check valve.
- Adjustable or non-adjustable superheat, for customer specific factory setting.
- Bleed function available.
- Customer specific engravement.
- Solder and mechanical connections
- Straightway versions with fixed orifice and with external equalization.
- UL listed, file SA7200

Valve program

Standard versions

Refrigerants:
R22 and R410A

Operating range:
+14 °F to +59 °F / –10 °C to +15 °C

Setting:

- Fixed setting:
  - Static superheat in accordance with customers' specifications.
- Adjustable setting:
  - Factory static superheat of 7.2 °F / 4 °K.

Packing:
Single or industrial pack

Versions:
All valves are in straightway versions.
With or without internal check valve.

Standard connections:
3/8 in. ODF inlet x 1/2 in. ODF outlet x
1/4 In flare nut 24.3 inch length

Capillary tube length: 31.5 In /0.8 m

Options on request

Refrigerants:
Other refrigerants.

Range:
Other temperature ranges.

MOP:
Special MOP charges.

Capillary tube lengths:
- 20 In. / 0.5 m
- 38.4 In / 0.975 m

Options for Connections:
Inlet/Outlet:
- Inlet: 3/8 in. ODM, 3/8 in. ODF, 1/2 in. ODF, chatleff, aeroquip
- Outlet: 3/8 in. ODF, 1/2 in ODF, 5/8 in ODF, chatleff, aeroquip, flare

Equalizer:
- Cu capillary tube size: Ø 1/8 in.
- 1/4 in. Flare Nut with l = 9.5, 16.9 or 24.3 in.
- Solder 1/8 in. ODM with l = 16.9 or 24.3 in.
- Solder 1/4 in ODF with l = 31.7 or 39.1 in.

Technical data

Max. operating temperature

- Thermostatic element:
  - R22: max. 212 °F / 100 °C
  - R410A: max. 212 °F / 100 °C
- Valve body:
  230 °F / 110 °C

Max. working pressure
MWP 630 psig / PS = 45.5 bar

Max. test pressure
680 psig / Pf = 47 bar

Identification

Essential valve data is given on the power element.

Main valve data example:

TR6	= Valve type
R410A	= Refrigerant
6.70 TR	= Rated capacity Qnom in Tons of Refrigeration MWP 630psig/
PS 45.5 bar	= Max. working pressure in psig and bar
067Uxxxx	= Code number
BC1109D	= Date making (BC=Mexico, week 11, year 2009, weekday D=Thursday)
+15/+60 °F	= Evaporating temperature range in °F
-10/+15 °C	= Evaporating temperature range in °C

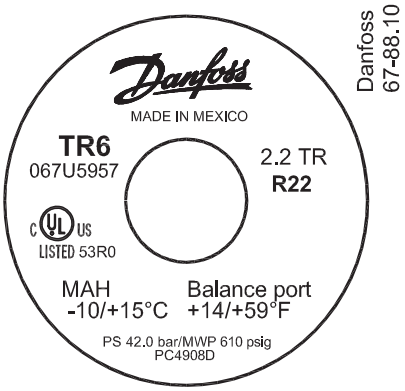

Fig. 1

Design and function

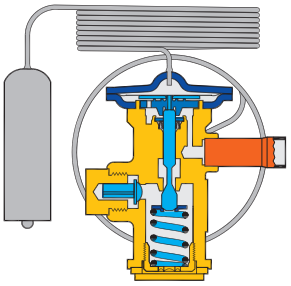

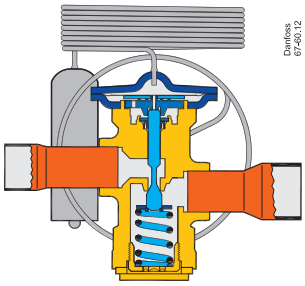

Fig. 2 TR 6 with fixed setting

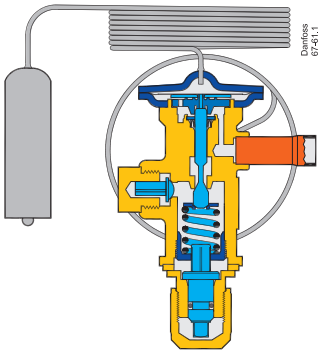

Fig. 3 TR 6 with adjustable setting

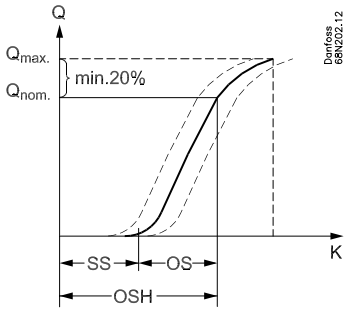

Fig. 4

1. Bulb
2. Thermostatic element
3. Push pin seal
4. Balanced port
5. Check valve
6. Setting spindle for adjustment of static superheat (SS)
7. Equalizer
8. Inlet connection
9. Outlet connection

The central push pin is sealed with a robust seal (pos. 3) that ensures maximum tightness and minimum friction through the lifetime of the valve.

The balanced port (pos. 4) ensures minimal superheat changes when condensing pressure varies. This feature makes the valve ideal for bi-flow operation.

Static superheat (SS) can be adjusted with the setting spindle (see fig. 3, pos. 6) . The standard superheat setting is 3.6 °F / 2 °K.

Terminology (fig.4)
SS = Static superheat
OS = Opening superheat
OSH = SS + OS = Operating superheat

Example
Static superheat
SS = 3.6°F (2K) (factory setting)
or according to customer specification.

Opening superheat
OS = 7.2 °F (4K)

The opening superheat is 7.2 °F / 3.6 °C, i.e. from the point the valve begins to open up to nominal capacity. Opening superheat (OS) is a fixed value and cannot be changed.

Operating superheat
OSH =SS + OS
OSH =3.6 °F + 7.2 °F = 10.8 °F (6 °K)

OSH is the total superheat that can be measured on the system.

Application

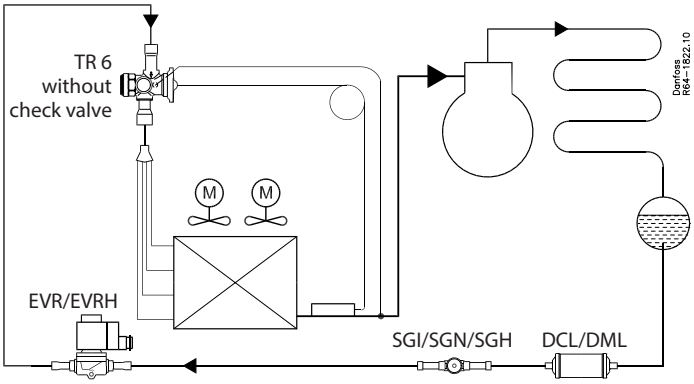

Fig. 5. Traditional air conditioning system, cooling only

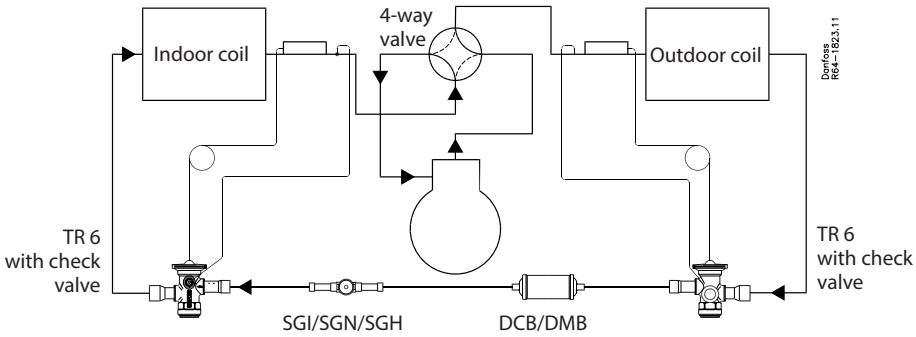

Fig. 6. Traditional air conditioning / heat pump system

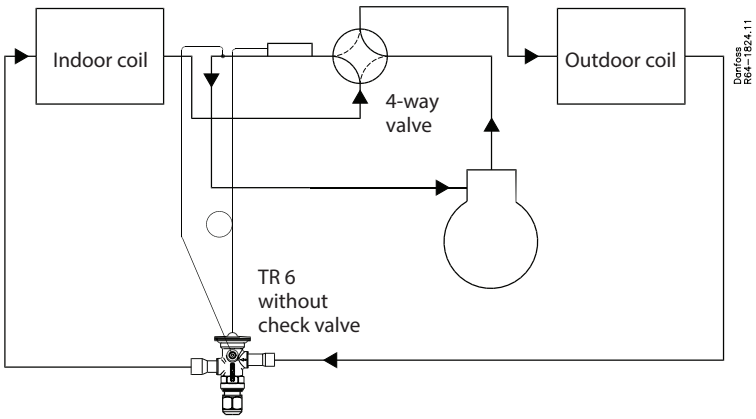

Fig. 7. Simplified air conditioning / heat pump system (bi-flow)

Fig. 5 illustrates the diagram of a traditional air conditioning system where the TR 6 is controlling liquid injection in one direction only.

Fig. 6 illustrates a split air conditioning/heat pump system with cooling/heating mode and two thermostatic expansion valves, one for cooling mode and one for heating mode.
The thermostatic expansion valves each has a built-in check valve, which has the function of preventing flow in one direction and allowing the flow in the opposite direction.
It means that one thermostatic expansion valve is controlling liquid injection into the evaporator and the other thermostatic expansion valve has an open check valve allowing the liquid refrigerant flow in the liquid line.

Fig. 7 illustrates a similar system as the previous one, but this time it is a packed unit with a short distance between the evaporator and the condenser, the bi-flow feature of the TR 6 thermostatic expansion valve can be used.
The two thermostatic expansion valves have, therefore, been replaced by one TR 6 bi-flow valve controlling liquid injection in both directions.
The normal flow direction marked with an arrow should be used for the primary function, i.e. cooling or heating.

Ordering

Adjustable setting

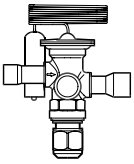

Range N = 14 °F → 59 °F (–10 °C → +15 °C)

R22 and R410A

Refrigerant	Rated capacity Q_{nom} [1]		Orifice no.	Connection[2] $^3/_8$ in. x $^1/_2$ in. x $^1/_4$ in. equalizer with flare nut ODF Inlet × Outlet
	TR	kW		
R22	3.3	11.4	3	**067L5855**
	4.5	15.8	4	**067L5856**
	5.3	18.5	5	**067L5857**
	5.6	19.6	6	**067L5858**
	6.7	23.6	7	**067L5859**
R410A	3	10.5	3	**067L5955**
	4	14.0	4	**067L5956**
	5	17.5	5	**067L5957**
	6	21.0	6	**067L5958**
	7	24.5	7	**067L5959**

Pressure equalisation = ¼ in. ODF

[1]) The rated capacity is based on: Evaporating temperature, t_e = 41 °F / 5 °C, Liquid temperature, t_l = 82 °F / 28 °C, Condensing temperature, t_c = 90 °F / 32 °C, Opening superheat, OS = max. 7.2 °F / 4K

[2]) Partnumbers consist of a valve, bulbstrap and the following connectors:
1 Chatleff $^3/_8$" female connector
1 Aeroquip $^5/_8$" female connector

Check valve capacity

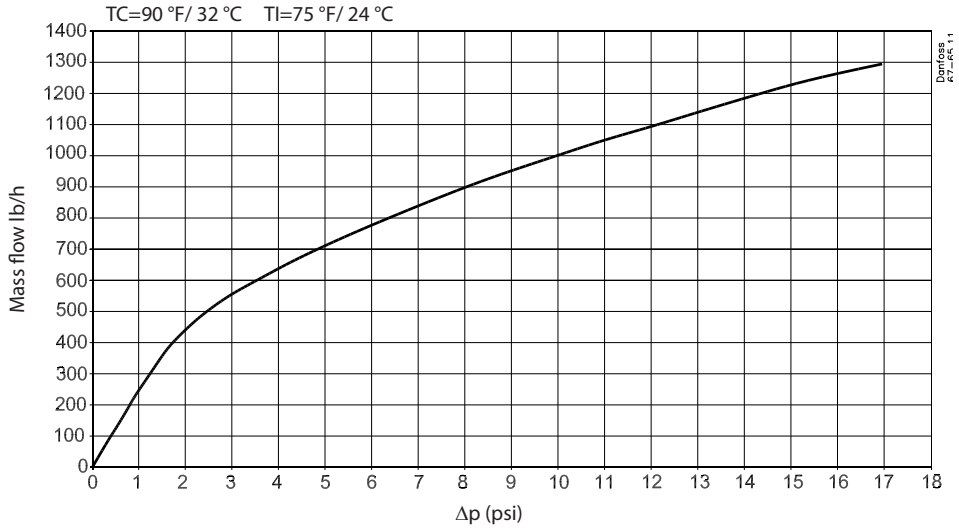

Fig. 8 Internal check valve for orifice bypass in reverse flow (flow rate as a function of pressure differential)

Capacity

US units

Capacity in TR for MAH +14/+59 °F at 7.2 °F static superheat SS

R22

Type	Orifice no.	Pressure drop across valve Δ psi								Pressure drop across valve Δ psi							
		50	75	100	125	150	175	200	225	50	75	100	125	150	175	200	225
		Evaporating temperature 0°F								**Evaporating temperature 20°F**							
TR 6	3	1.48	1.63	1.72	1.77	1.80	1.81	1.81	1.79	1.99	2.21	2.32	2.39	2.42	2.43	2.41	2.39
	4	2.17	2.38	2.50	2.56	2.59	2.59	2.57	2.53	2.88	3.17	3.31	3.39	3.41	3.41	3.38	3.33
	5	2.67	2.91	3.05	3.11	3.14	3.13	3.10	3.05	3.49	3.83	3.99	4.07	4.10	4.08	4.03	3.97
	6	2.85	3.11	3.24	3.30	3.32	3.30	3.26	3.21	3.72	4.07	4.24	4.32	4.33	4.31	4.25	4.18
	7	3.49	3.79	3.93	3.98	3.98	3.94	3.87	3.79	4.55	4.95	5.14	5.21	5.21	5.16	5.08	4.97
		Evaporating temperature 40°F								**Evaporating temperature 50°F**							
TR 6	3	2.61	3.01	3.27	3.36	3.35	3.32	3.28	3.22	2.56	2.96	3.24	3.41	3.54	3.63	3.69	3.72
	4	3.78	4.36	4.51	4.55	4.54	4.49	4.43	4.34	3.70	4.28	4.68	4.94	5.12	5.24	5.12	4.99
	5	4.55	5.13	5.28	5.33	5.33	5.27	5.19	5.09	4.45	5.16	5.64	5.95	6.14	6.02	5.89	5.75
	6	4.91	5.42	5.59	5.64	5.63	5.56	5.47	5.36	4.81	5.57	6.09	6.42	6.45	6.33	6.20	6.05
	7	6.00	6.53	6.73	6.79	6.76	6.67	6.55	6.40	6.07	7.03	7.68	7.81	7.72	7.58	7.42	7.23

SI units

Capacity in kW for MAH –10 °C/+15 °C at 4 °K static superheat SS

R22

Type	Orifice no.	Pressure drop across valve Δ bar								Pressure drop across valve Δ bar							
		3.5	5.2	6.9	8.6	10.3	12.1	13.8	15.5	3.5	5.2	6.9	8.6	10.3	12.1	13.8	15.5
		Evaporating temperature –17.8°C								**Evaporating temperature –6.7°C**							
TR 6	3	5.18	5.71	6.03	6.21	6.31	6.34	6.32	6.27	6.98	7.72	8.13	8.36	8.47	8.49	8.45	8.36
	4	7.61	8.34	8.74	8.96	9.05	9.05	8.98	8.87	10.08	11.08	11.60	11.86	11.95	11.92	11.82	11.65
	5	9.34	10.20	10.67	10.90	10.98	10.95	10.85	10.69	12.22	13.39	13.98	14.26	14.34	14.28	14.12	13.89
	6	9.98	10.87	11.34	11.56	11.62	11.56	11.42	11.23	13.03	14.25	14.85	15.11	15.17	15.08	14.89	14.62
	7	12.23	13.25	13.75	13.94	13.93	13.79	13.55	13.25	15.92	17.34	18.00	18.25	18.25	18.06	17.77	17.39
		Evaporating temperature 4.4°C								**Evaporating temperature 10°C**							
TR 6	3	9.14	10.55	11.44	11.75	11.73	11.63	11.47	11.27	8.95	10.36	11.33	11.95	12.39	12.71	12.91	13.03
	4	13.22	15.27	15.78	15.92	15.89	15.73	15.50	15.20	12.95	14.99	16.39	17.28	17.92	18.35	17.91	17.45
	5	15.93	17.94	18.49	18.67	18.64	18.46	18.18	17.82	15.59	18.05	19.74	20.81	21.49	21.07	20.63	20.14
	6	17.19	18.97	19.55	19.73	19.69	19.47	19.15	18.76	16.84	19.49	21.31	22.46	22.58	22.16	21.70	21.17
	7	21.00	22.85	23.57	23.77	23.67	23.36	22.93	22.41	21.25	24.60	26.89	27.33	27.02	26.54	25.96	25.31

Correction for subcooling Δt_{sub}
The evaporator capacity used must be corrected if subcooling deviates from 7.2°F/ 4°K. The corrected capacity can be obtained by multiplying the evaporator capacity by the correction factor given below.

Note:
Insufficient subcooling can produce flash gas.

Correction factor for subcooling Δt_{sub}

Correction factor	Δt_{sub}							
	4 °K	10 °K	15 °K	20 °K	25 °K	30 °K	35 °K	40 °K
	7.2 °F	18 °F	27 °F	36 °F	45 °F	55 °F	63 °F	72 °F
R22	1.00	1.06	1.11	1.15	1.20	1.24	1.29	1.33

Capacity *(cont.)*

US units

Capacity in TR for MAH +14/+59°F at 7.2°F static superheat SS

R410A

Type	Orifice no.	Pressure drop across valve Δ psi								Pressure drop across valve Δ psi							
		50	75	100	125	150	175	200	225	50	75	100	125	150	175	200	225
		Evaporating temperature 0°F								**Evaporating temperature 20°F**							
TR 6	3	1.48	1.67	1.79	1.86	1.90	1.93	1.94	1.94	1.87	2.13	2.30	2.40	2.46	2.50	2.51	2.51
	4	2.20	2.47	2.63	2.72	2.78	2.81	2.81	2.80	2.74	3.12	3.36	3.49	3.56	3.60	3.61	3.59
	5	2.71	3.05	3.23	3.34	3.41	3.43	3.43	3.41	3.36	3.82	4.10	4.25	4.33	4.37	4.37	4.35
	6	2.91	3.25	3.45	3.56	3.62	3.65	3.64	3.61	3.59	4.08	4.37	4.53	4.61	4.65	4.64	4.61
	7	3.58	3.99	4.22	4.34	4.40	4.41	4.39	4.34	4.42	5.00	5.34	5.52	5.61	5.64	5.62	5.56
		Evaporating temperature 40°F								**Evaporating temperature 50°F**							
TR 6	3	2.30	2,63	2.86	3.01	3.09	3.14	3.15	3.15	2.53	2.90	3.15	3.32	3.43	3.48	3.49	3.48
	4	3.33	3.80	4.11	4.31	4.41	4.46	4.47	4.44	3.63	4.15	4.49	4.71	4.85	4.90	4.90	4.87
	5	4.03	4.59	4.96	5.20	5.31	5.36	5.36	5.32	4.36	4.97	5.37	5.63	5.79	5.84	5.84	5.80
	6	4.31	4.90	5.29	5.54	5.65	5.70	5.69	5.65	4.66	5.31	5.73	6.00	6.16	6.21	6.21	6.16
	7	5.29	6.01	6.47	6.77	6.89	6.93	6.91	6.85	5.73	6.51	7.02	7.34	7.53	7.57	7.55	7.48

SI units

Capacity in kW for MAH –10 °C/+15 °C at 4 °K static superheat SS

R410A

Type	Orifice no.	Pressure drop across valve Δ bar								Pressure drop across valve Δ bar							
		3.5	5.2	6.9	8.6	10.3	12.1	13.8	15.5	3.5	5.2	6.9	8.6	10.3	12.1	13.8	15.5
		Evaporating temperature –17.8°C								**Evaporating temperature –6.7°C**							
TR 6	3	5.19	5.86	6.25	6.50	6.66	6.76	6.79	6.79	6.53	7.47	8.06	8.40	8.62	8.74	8.79	8.78
	4	7.69	8.65	9.19	9.53	9.73	9.83	9.85	9.80	9.60	10.93	11.75	12.20	12.47	12.60	12.63	12.57
	5	9.50	10.66	11.31	11.70	11.92	12.02	12.02	11.95	11.76	13.37	14.34	14.87	15.16	15.30	15.31	15.22
	6	10.17	11.39	12.07	12.47	12.68	12.77	12.74	12.65	12.58	14.28	15.30	15.84	16.13	16.26	16.24	16.13
	7	12.53	13.98	14.76	15.19	15.40	15.44	15.36	15.20	15.46	17.51	18.70	19.32	19.63	19.73	19.66	19.47
		Evaporating temperature 4.4°C								**Evaporating temperature 10°C**							
TR 6	3	8.04	9.22	10.01	10.55	10.82	10.98	11.03	11.01	8.86	10.16	11.03	11.62	12.01	12.17	12.22	12.19
	4	11.64	13.30	14.38	15.10	15.44	15.61	15.63	15.55	12.71	14.52	15.70	16.48	16.97	17.14	17.16	17.05
	5	14.10	16.07	17.35	18.19	18.57	18.75	18.75	18.63	15.26	17.40	18.79	19.70	20.25	20.44	20.43	20.29
	6	15.07	17.16	18.51	19.38	19.77	19.94	19.92	19.77	16.31	18.58	20.05	20.99	21.57	21.74	21.72	21.55
	7	18.52	21.05	22.66	23.68	24.11	24.27	24.20	23.98	20.05	22.80	24.56	25.68	26.34	26.51	26.44	26.19

Correction for subcooling Δt_{sub}
The evaporator capacity used must be corrected if subcooling deviates from 7.2 °F/ 4 °K. The corrected capacity can be obtained by multiplying the evaporator capacity by the correction factor given below.

Note:
Insufficient subcooling can produce flash gas.

Correction factor for subcooling Δt_{sub}

Correction factor	Δt_{sub}							
	4 °K	10 °K	15 °K	20 °K	25 °K	30 °K	35 °K	40 °K
	7.2 °F	18 °F	27 °F	36 °F	45 °F	55 °F	63 °F	72 °F
R410A	1.00	1.08	1.14	1.20	1.26	1.31	1.37	1.43

Sizing

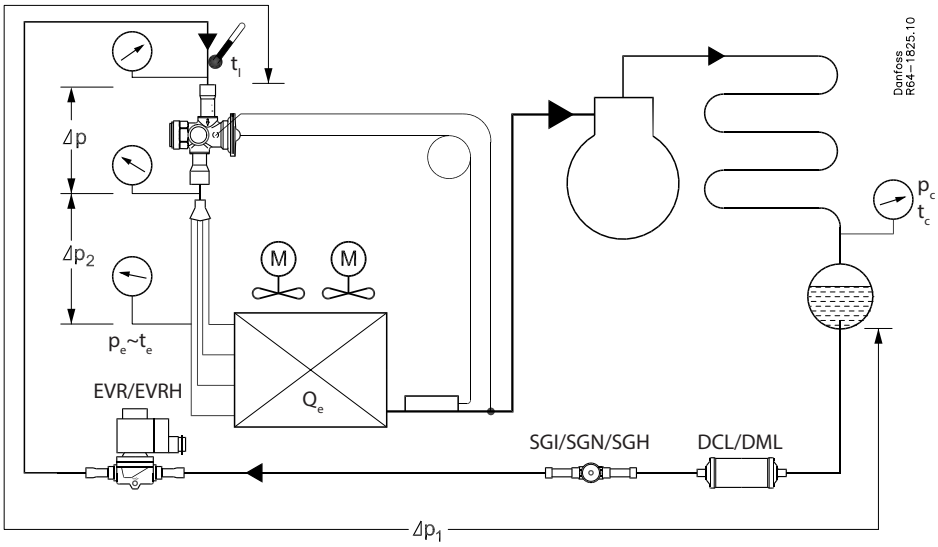

Fig. 9

Example:

Refrigerant		R22
Evaporating temperature	t_e =	40°F
	p_e =	79 psi
Condensing temperature	t_c =	118°F
	p_c =	256 psi
Pressure drop in liquid line, drier and distributor system	$\Delta p_2 + \Delta p_1$ =	27 psi
Pressure drop in valve	$\Delta p = 256 - 79 - 27$ =	150 psi
Subcooling	$\Delta t_{sub} = t_c - t_l$ =	18 °F
Evaporator capacity	=	4.0 TR
Correction factor from table	=	1.06

The corrected evaporator capacity then becomes 4.0 × 1.06 = 4.24 TR

As the selected valve must be equal to or slightly larger than the corrected evaporator capacity of 4.24 TR, the TR 6 with orifice 4 having a table capacity of 5.4 TR would be a suitable choice.

US units

Capacity in TR for MAH +14/+59°F at 7.2°F static superheat SS

R22

Type	Orifice no.	Pressure drop across valve Δ psi								Pressure drop across valve Δ psi							
		50	75	100	125	150	175	200	225	50	75	100	125	150	175	200	225
		Evaporating temperature 0°F								**Evaporating temperature 20°F**							
TR 6	3	1.48	1.63	1.72	1.77	1.80	1.81	1.81	1.79	1.99	2.21	2.32	2.39	2.42	2.43	2.41	2.39
	4	2.17	2.38	2.50	2.56	2.59	2.59	2.57	2.53	2.88	3.17	3.31	3.39	3.41	3.41	3.38	3.33
	5	2.67	2.91	3.05	3.11	3.14	3.13	3.10	3.05	3.49	3.83	3.99	4.07	4.10	4.08	4.03	3.97
	6	2.85	3.11	3.24	3.30	3.32	3.30	3.26	3.21	3.72	4.07	4.24	4.32	4.33	4.31	4.25	4.18
	7	3.49	3.79	3.93	3.98	3.98	3.94	3.87	3.79	4.55	4.95	5.14	5.21	5.21	5.16	5.08	4.97
		Evaporating temperature 40°F								**Evaporating temperature 50°F**							
TR 6	3	2.61	3.01	3.27	3.36	3.35	3.32	3.28	3.22	2.56	2.96	3.24	3.41	3.54	3.63	3.69	3.72
	4	3.78	4.36	4.51	4.55	4.54	4.49	4.43	4.34	3.70	4.28	4.68	4.94	5.12	5.24	5.12	4.99
	5	4.55	5.13	5.28	5.33	5.33	5.27	5.19	5.09	4.45	5.16	5.64	5.95	6.14	6.02	5.89	5.75
	6	4.91	5.42	5.59	5.64	5.63	5.56	5.47	5.36	4.81	5.57	6.09	6.42	6.45	6.33	6.20	6.05
	7	6.00	6.53	6.73	6.79	6.76	6.67	6.55	6.40	6.07	7.03	7.68	7.81	7.72	7.58	7.42	7.23

Dimensions and weights

Fixed setting

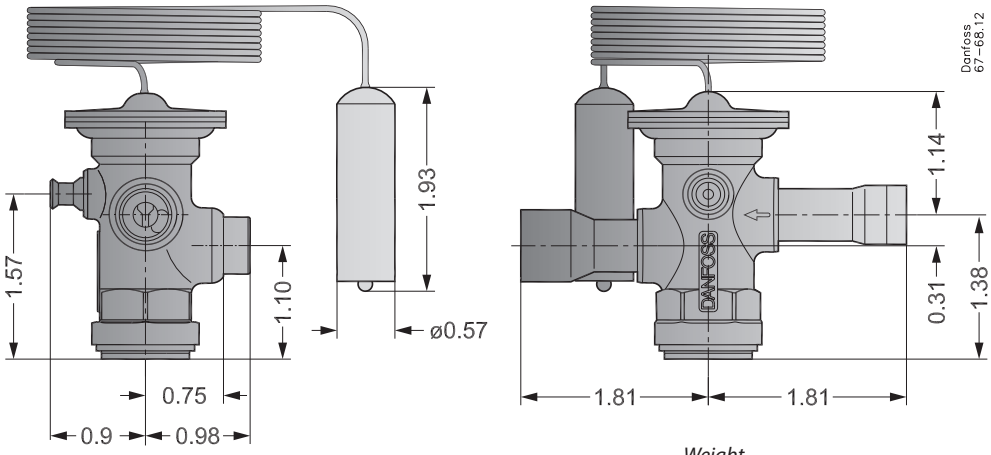

All dimensions in inches
Fig. 10

Weight
0.57 lbs

Adjustable setting

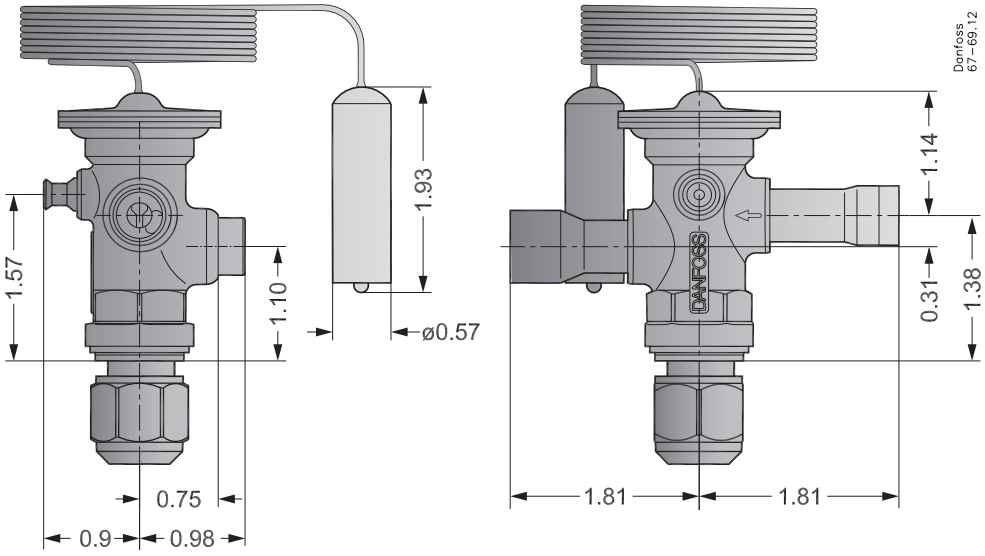

All dimensions in inches

Fig. 11

Weight
0.67 lbs

Danfoss can accept no responsibility for possible errors in catalogues, brochures and other printed material. Danfoss reserves the right to alter its products without notice.This also applies to products already on order provided that such alterations can be made without subsequential changes being necessary in specifications already agreed.
All trademarks in this material are property of the respective companies. Danfoss and the Danfoss logotype are trademarks of Danfoss A/S. All rights reserved.