GREYSTONE ENERGY SYSTEMS INC

LOW PRESSURE TRANSMITTERS
LP3 Series

LP3 c/w LCD

LP3 c/w integrated static probe

Precision low pressure control/sensing

FEATURES:

- Jumper selectable 2 wire current and 3 wire voltage outputs
- 24 Vac/dc power supply
- Six variable jumper selectable pressure ranges, W.C. & Pa.
- Available options include LCD display and integrated static probe

Peace of mind through reliable pressure monitoring

GREYSTONE HAS AN **ISO 9001** REGISTERED QUALITY SYSTEM

APPLICATIONS:

- HVAC/VAV
- Process Control
- Air Flow Monitoring
- Drop Across Air Filters
- Hydraulic Pressures
- Pneumatic Pressures

SPECIFICATION:

Accuracy	±1% F.S.O.
Measurement Type	Differential (two port)
Response Time	250 ms
Stability	< ±1% F.S.O. per year
Thermal Effects	< ±3% over compensated range
Compensated Range	0 - 50˚ C (32 - 122˚F)
Proof Pressure	40" W.C. (100" for 12" and 20" models)
Burst Pressure	60" W.C. (200" for 12" and 20" models)
Operating Conditions	0 - 70˚C (32 - 158˚F), 10 - 90 %RH, non-condensing
Media Compatibility	Non-corrosive, non-ionic fluids such as clean dry air or inert gases
Power Supply	20 - 28 Vac/dc (non-isolated half-wave rectified)
Supply Current	< 4 mA
Input Voltage Effect	Negligible over specified operating range
Protection Circuitry	Reverse voltage protected and out limited
Output Signal	4-20 mA (2-wire), 0-5 or 0-10 Vdc (3-wire), switch selectable
Output Drive Capabilities	Current: 400 ohms max @ 24 vdc Voltage: 10K ohms min
Zero Adjustments	Pushbutton auto-zero
Wiring Connections	Screw terminal block (14 to 22 AWG)
Pressure Connection	Barbed ports for 5 mm (0.170") ID flexible tubing
Conduit Connection	Access hole for ½" NPT conduit or cable gland
Optional Display	3½ digit LCD, 0.4" digit height
Enclosures	ABS, UL94-5VB, IP61 (NEMA 2) 127mm x 84mm x 53mm (5.00" W x 3.3" H x 2.1" D)
Weight	159 grams (5.6 oz)

ACCESSORIES:

FPP & SPP Series Pitot Tube

The FPP and SPP series are used to sense velocity pressure or static pressure respectively. Constructed of 304 stainless steel probes with an ABS mounting bracket, they available in 150 mm (6") or 300 mm (12") lengths. Kits are available for differential and static that are complete with pneumatic tubing.

DPFS Series Differential Pressure Probe

The DPFS series Averaging Flow Sensor is ideal for sensing differential pressure in the inlet section of variable air volume terminal units and fan terminal units. Units can also be used to sense differential pressure at other locations in the main or branch duct systems. They are made of ABS/polycarbonate (UL94-5V) and available in lengths from 100 mm (4") to 560 mm (22")

MP Series Differential Pressure Probes

The MP series Air Velocity Pitot Tubes are used in conjunction with a DP transmitter to calculate airflow in larger ducts or in areas of turbulent airflow. The units come in pairs in either ABS or 316 S/S and are available in various lengths from 610mm (24") to 2000 mm (80"). Gasketed mounting collars for both probes are included.

DESCRIPTION:

The LP3 Low Pressure Transmitter can be used to measure positive, negative or differential pressure in the ranges of 1"W.C. to 20"W.C. (250 TO 2000Pa). The piezoresistive sensor is ideal for monitoring the pressure for air or other clean inert gas and is limited only to those media which will not attack polyetherimide, silicon, fluorosilicone, silicone, EPDM and neoprene seals.

The LP3 features field selectable pressure ranges and output signal types for the most flexible applications. Typical HVAC applications include monitoring of filter differential pressure or VAV applications. The output signal is factory calibrated and temperature compensated for highest startup accuracy and trouble-free operation. Available options include LCDs and integrated static pressure probe.

Please read the installation instructions carefully before installing and commissioning the pressure transducer. Failure to follow the instructions may result in product damage. A qualified technician must install this device.

The LP3 Pressure Transducer mounts on any surface using the two holes provided on the base of the unit. Make sure there is enough space around the unit to connect the pressure tubing without kinking and avoid locations where severe vibrations or excessive moisture are present. Mount the enclosure with two user-supplied screws but do not over-tighten.

The unit may be mounted in any position but typically is installed on a vertical surface with the pressure ports on the right and the cable entrance on the left. The enclosure has a standard opening for a 1/2" conduit and may be installed with either conduit and a conduit coupler or a cable gland type fitting. Do not use in an explosive or hazardous environment, with combustible or flammable gasses, as safety or emergency stop devices or in any other application where failure of the product could result in personal injury. Take electrostatic discharge precautions during installation and do not exceed the device ratings.

PRODUCT ORDERING INFORMATION

MODEL	Description
LP3	Low Pressure Transmitter w/ jumper selectable ranges & outputs

CODE	LCD Display
A	No Display
B	Display

CODE	Ranges
00	±1", ±2", ±4", 0-1", 0-2", 0-4"W.C.
01	±3", ±5", ±8", 0-3", 0-5", 0-8"W.C.
02	±6", ±10", ±12", 0-6", 0-10", 0-12"W.C.
03	±10", ±15", ±20", 0-10", 0-15", 0-20"W.C.
04	±250, ±500, ±1000, 0-250, 0-500, 0-1000 Pa
05	±500, ±1000, ±2000, 0-500, 0-1000, 0-2000 Pa

CODE	Options
S	Integrated Static Pressure Probe

LP3	B	00	S	← Typical Model Number

Example: LCD, ±1" to 0-4" W.C., Static Pressure Probe

Greystone Energy Systems Inc. reserves the right to make design modifications without prior notice.

Note: 1"W.C. = 249.0Pa @ 40 F
1 bar = 10^5 Pa

DIMENSIONS:

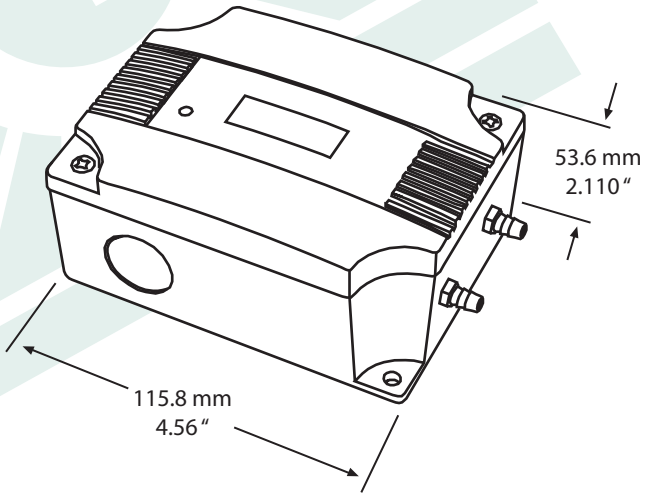

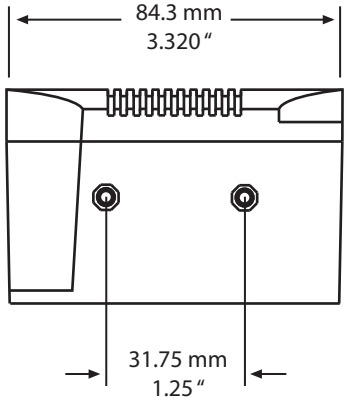

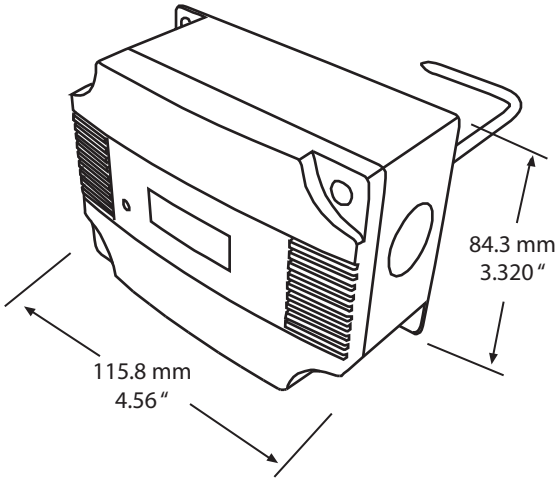

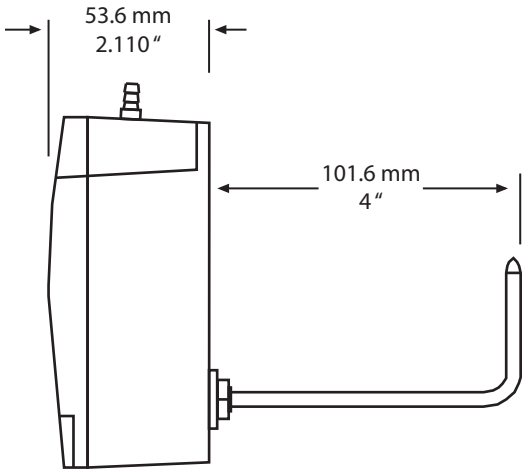

GREYSTONE
ENERGY SYSTEMS INC
Greystone Energy Systems Inc.

RoHS COMPLIANT

Greystone Energy Systems Inc. is one of North America's largest ISO registered manufacturers of HVAC/R sensors and transmitters for Building Automation Management Systems. We have conscientiously established a worldwide reputation as an industry leader by maintaining leading-edge design technology, prompt technical support, and a commitment to on-time deliveries. We take pride in our Quality Management System which is ISO 9001 certified, assuring our customers of consistent product reliability.

GREYSTONE HAS AN **ISO 9001** REGISTERED QUALITY SYSTEM

LP3-SPE-001 1/14
PRINTED IN CANADA