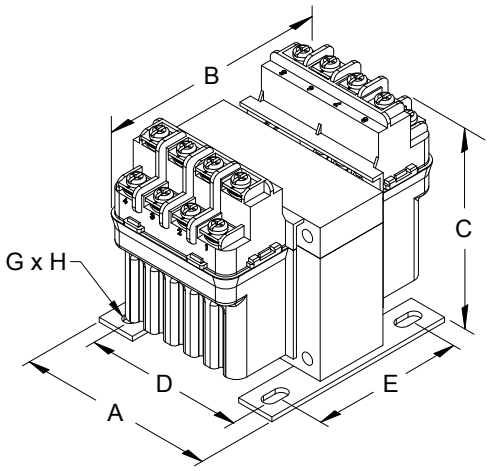

FIGURE A

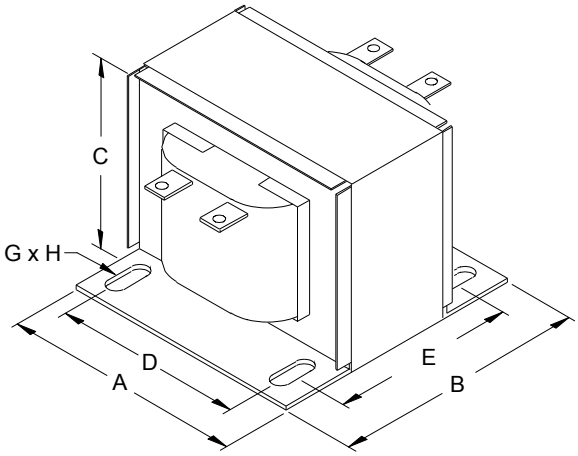

FIGURE C

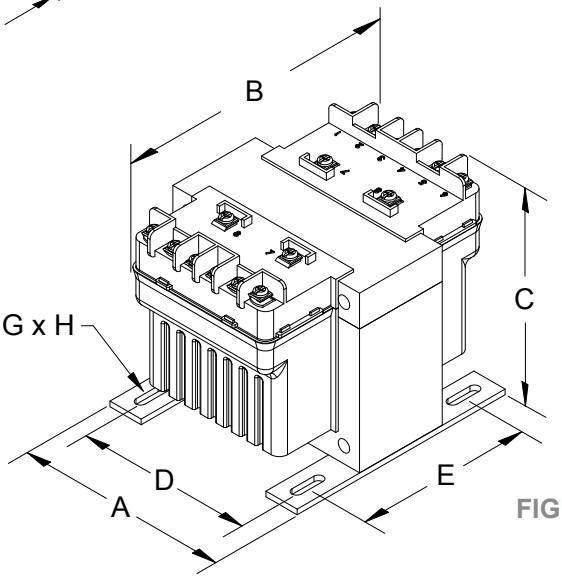

FIGURE B

Group C

Primary Voltage: **240 x 480** || 230 x 460 || 220 x 440
Secondary Voltage: **120 x 240** || 115 x 230 || 110 x 220

c UL us CE **50/60 Hertz**

VA Rating	Catalog Number	Mtg. Fig.	Output Amps	Overall Dimensions			Mounting Centers		Mounting Slot	Height with Finger Guard	Depth with Finger Guard	Approx. Ship Weight Lbs.	Optional Primary Fuse Kit P/N
				A	B	C	D	E	G X H				
50	**PH50MQMJ**	A	0.42/0.21	3.00	4.38	3.19	2.50	2.25	0.22 x 0.44	4.00	5.82	3.50	PFK1
75	**PH75MQMJ**	A	0.63/0.31	3.25	3.88	3.56	2.63	2.50	0.22 x 0.44	4.37	5.32	3.54	PFK1
100	**PH100MQMJ**	A	0.83/0.42	3.25	4.19	3.63	2.63	2.63	0.22 x 0.44	4.44	5.63	4.50	PFK1
150	**PH150MQMJ**	B	1.25/0.63	4.00	4.94	3.81	3.38	2.75	0.22 x 0.75	4.50	6.44	5.70	PFK2
250	**PH250MQMJ**	B	2.08/1.04	4.50	5.44	3.81	3.75	3.13	0.22 x 0.75	4.50	6.94	7.50	PFK2
350	**PH350MQMJ**	B	2.92/1.46	4.50	5.19	4.44	3.75	3.75	0.22 x 0.75	4.94	6.69	10.1	PFK3
500	**PH500MQMJ**	B	4.17/2.08	4.75	5.94	4.31	4.06	3.81	0.31 x 0.94	4.81	7.44	14.2	PFK3
750	**PH750MQMJ**	B	6.25/3.13	5.13	6.69	4.31	4.38	4.31	0.31 x 0.81	4.81	8.19	16.6	PFK3
1000	**PH1000MQMJ**	B	8.33/4.17	5.25	6.81	4.94	4.50	4.44	0.31 x 0.81	5.56	8.31	23.6	PFK3
1500	**PH1500MQMJ**	B	12.5/6.25	5.25	8.19	4.94	4.50	6.06	0.38 x 1.00	5.56	9.69	32.0	PFK3
2000	**PH2000MQMJ**	C	16.7/8.33	6.38	7.50	5.50	4.38/5.31	6.00	0.31 x 1.13	N/A	N/A	45.4	N/A
3000	**PH3000MQMJ**	C	25.0/12.5	7.50	10.00	6.25	4.50/6.00	7.00	0.38 x 1.00	N/A	N/A	76.7	N/A
5000	**PH5000MQMJ**	C	41.7/20.8	9.00	11.00	7.63	5.25/7.00	7.00	0.44 x 1.00	N/A	N/A	121.2	N/A

Secondary fuse clips, fuse clip mounting screws and primary and secondary voltage links/jumpers supplied standard with transformers up to and including 1500VA. Refer to page 54 for wiring schematic drawing. Special voltages and VA sizes available upon request.
CE mark only standard on molded units up to and including 1500VA.

All dimensions in inches

© Hammond Power Solutions Inc.

Data subject to change without notice.