TrueDRY™ Dehumidification Systems

The Honeywell TrueDRY dehumidifiers provide great value to contractors and homeowners by doing more with less energy. Our compact units have the smallest footprint in their class; come with an anti-corrosion e-coating coil and now, according to ENERGY STAR's performance testing, they are among the most efficient in the industry.

- Removes 65/90/120 pints of water per day from the indoor air
- Built-in fresh air supply
- Energy Star 3.0 Rated
- E-Coated Coil delivers longer life and increased efficiency.
- Improved design to reduce noise and save space.
- 65 pint model offers on-board dehumidistat

Application: Dehumidifier

Product Number	Capacity (pints per day)	Capacity (gallons per day)	Capacity (liters per day)	Plenum Opening (Diameter) (inch)	Plenum Opening (Diameter) (mm)	Amps.	Includes	Weight (lb)
DR65A2000/U	65 pints per day	8 3/25 gal per day	30 L per day	8 in. collars	203 mm collar	5.2 Amps	Four leveling feet with rubber isolation pads.	55 lb
DR90A2000/U	90 pints per day	11 1/4 gal per day	45 L per day	10 in. collars; 6 in. ventilation collar	254 mm collars; 152 mm vent collar	5.9 Amps	Four leveling feet with rubber isolation pads.	82 lb
DR120A2000/U	120 pints per day	15 gal per day	57 L per day	10 in. collars; 6 in. ventilation collar	254 mm collars; 152 mm vent collar	7.3 Amps	Four leveling feet with rubber isolation pads.	90 lb

DR65A dimensions in Inches (millimeters)

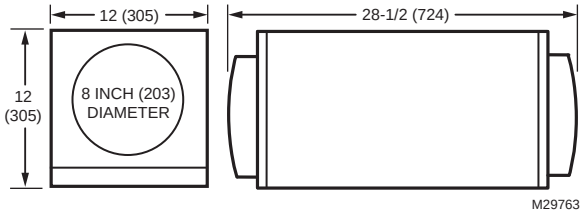

DR90A dimensions in Inches (millimeters)

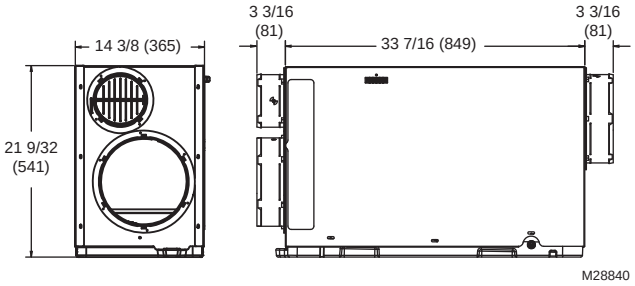

DR120A dimensions in Inches (millimeters)

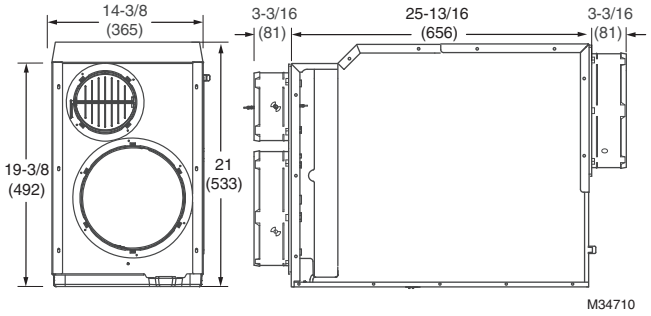

Parts List DR65

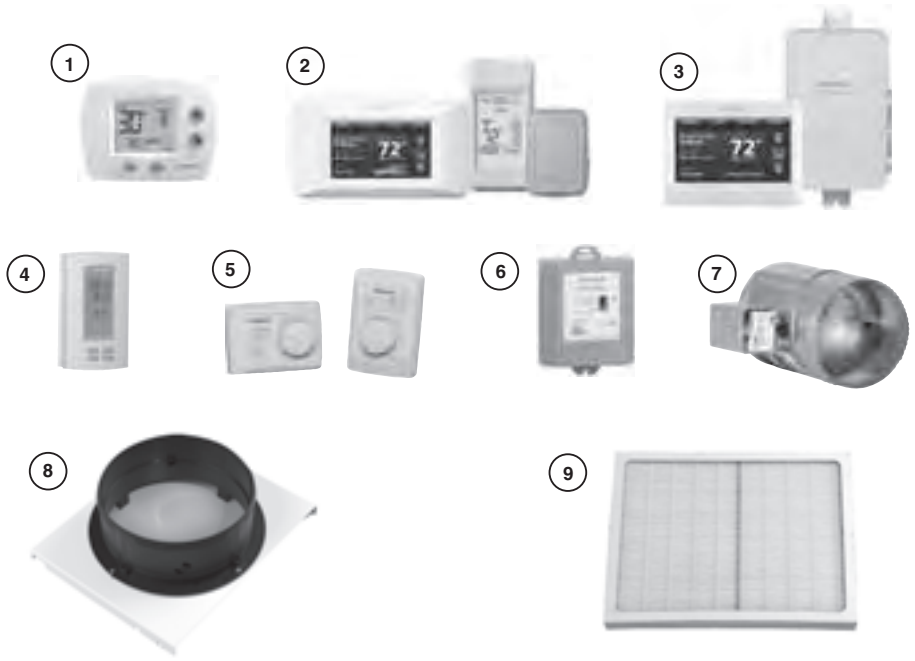

Figure Reference	Description	Part Number
1	HumidiPRO Digital Humidity Control	H6062A1000
2	Prestige Comfort System	YTHX9321R5003
3	VisionPRO IAQ Total Comfort Control	YTH9421C1010
4	TrueIAQ digital IAQ control	DG115EZIAQ
5	H8908D Manual Dehumidistat	H8908DSPST
6	Automatic ventilation control	W8150A1001
7	Motorized ventilation damper	EARD 6
	Compressor overload	50049537-001
	Compressor relay, DPDT 24 VAC, 30A	50049537-002
	Run capacitor, 35 MFD	50049537-003
8	8-in. Duct Collar	50049537-004
9	Filter	50049537-005
	Fan	50049537-006
	Fan relay, SPDT, 24 Vac, 15A	50035445-011

M34850

TrueDRY Dehumidification System

Parts List DR65

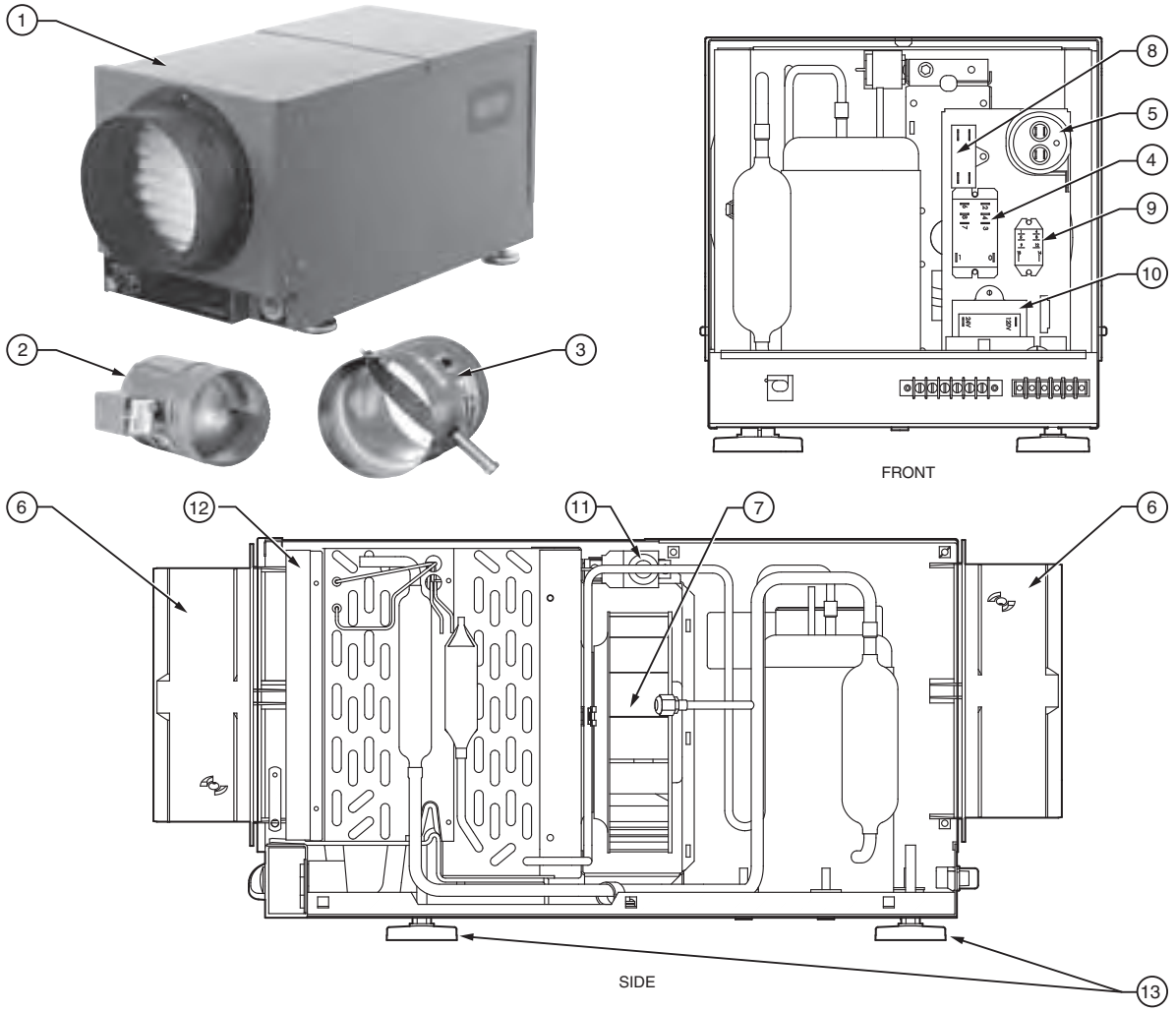

Figure Reference	Base and Accessory Parts	Part Number
1	TrueDRY DR65	DR65A2000/U
2	Motorized Ventilation Damper	EARD6
3	8 in. Backdraft Damper (Discard Included Counterweight)	SPRD8
	Replacement Parts	
4	Compressor Relay, 24 VAC, 30 A	50049537-002
5	Compressor Run Capacitor	50049537-003
6	8" Duct Collar	50049537-004
7	Fan Assembly	50049537-006
8	Capacitor - Fan	50070204-001
9	Fan Relay, SPDT, 24 VAC, 15A	50035445-011
10	Transformer 120/24 VAC, 40 VA	50035445-013
11	Defrost Thermostat	50070204-002
12	Filter	50049537-005
13	Leveling Foot	50035445-019

M33733

Parts List DH150

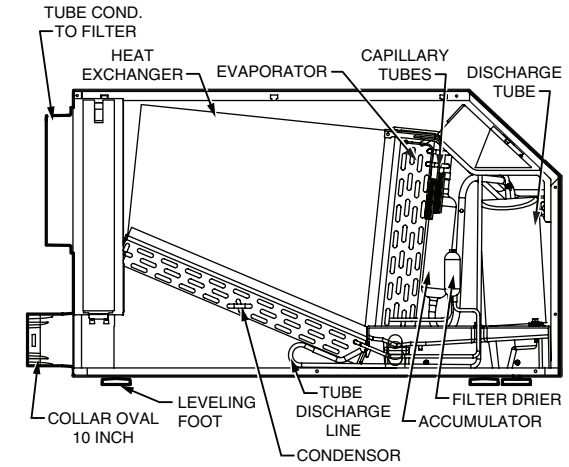

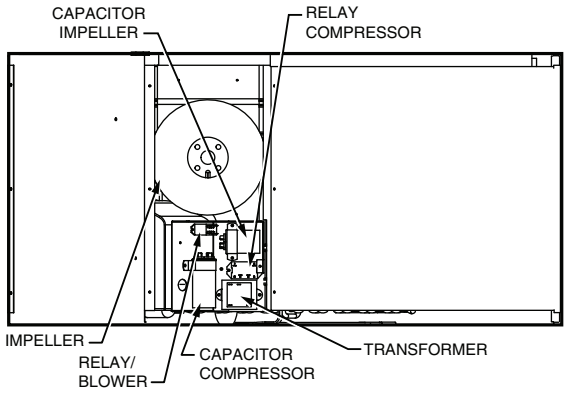

Description	Part Number
Heat Exchanger	50035445-001
Evaporator	50035445-002
Capillary Tubes .050 in. x .124 in. x 59.00 in.	50035445-003
Compressor — Toshiba 8.1	50035445-004
Accumulator	50035445-005
Filter/Drier	50035445-006
Tube — Cond. to Filter	50035445-007
Tube — Discharge Line	50035445-008
Condensor	50035445-009
Impeller	50035445-010
Relay/Blower	50035445-011
45mFd Capacitor — Compressor	50035445-012
Transformer	50035445-013
Relay/Compressor	50035445-014
15mFd Capacitor — Impeller	50035445-015
Collar — 10 in.	50035445-016
Collar — Oval 10 in. x 4 in.	50035445-017
Collar 6 in. with damper	50035445-018
Leveling Foot	50035445-019
Filter MERV II	50035445-020

M33732

TrueDRY Parts and Accessories

Product Number	Description	Used With
50018994-001/U	MERV11 1 in. Filter Replacement for DH90 Dehumidifier	DH90
50018995-001/U	DH90 10 in. Backdraft Damper	DH90
50027976-001/U	DR90 blower assembly	DH90, DR90A1000
50027980-001/U	DH90 compressor (capacitor)	DH90
50027981-001/U	DH90 leveling feet (4 ft per kit)	DH90
50033204-001/U	DH65 compressor	DH65
50033205-001/U	DH65 compressor overload	DH65
50033205-002/U	DH65 compressor relay, SPST 24 Vac 30A	DH65
50033205-003/U	DH65 compressor run capacitor 35 MFD	DH65
50033205-004/U	Blower Motor and Fan	DH65
50033205-005/U	Fan relay, SPDT, 24 Vac, 15A	DH65
50033205-006/U	DH65 condenser, evaporator, strainer and capillary tube assembly	DH65
50033205-009/U	DH65 air filter. MERV 11	DH65
50035445-001/U	DH150 heat exchanger	DH150
50035445-002/U	DH150 Evaporator	DH150
50035445-003/U	DH150 capillary tubes, 0.050in x 0.124in x 59.00in	DH150
50035445-004/U	DH150 compressor	DH150
50035445-005/U	DH150 accumulator	DH150
50035445-006/U	DH150 filter/drier	DH150
50035445-007/U	DH150 tube -condenser to filter	DH150
50035445-008/U	DH150 tube -discharge line	DH150

TrueDRY Dehumidification System

Product Number	Description	Used With
50035445-009/U	DH150 condenser	DH150
50035445-010/U	DH150 Fan Assembly	DH150
50035445-011/U	TrueDRY Fan relay, SPDT, 24 Vac, 15A	DR65, DR90, DR120, DH150
50035445-012/U	DH150 45 MFD capacitor -compressor	DH150
50035445-013/U	TrueDRY Transformer 120/24 Vac, 40 VA	DR65, DR90, DR120, DH150
50035445-014/U	TrueDRY compressor relay, SPST, 24 Vac, 30A	DR90, DR120
50035445-015/U	DH150 15 MFD capacitor-impeller	DH150
50035445-016/U	DH150 collar 10 inch	DH150
50035445-017/U	DH150 collar oval 10 inch	DH150
50035445-018/U	DH150 collar w/damper 6 inch	DH150
50035445-019/U	TrueDRY leveling feet (4 feet)	DR65A2000, DR90, DR120, DH150
50035445-020/U	DH150 MERV 11 filter	DH150
50049536-001/U	DR90 compressor run capacitor	DR90A1000
50049536-003/U	DR90 Filter	DR90A1000
50049536-004/U	DR90 6 in. duct collar	DR90, DR120
50049536-005/U	TrueDRY 10 in. duct collar	DR90, DR120
50049536-006/U	DR90 magnetic door, white	DR90A1000
50049536-007/U	Defrost Thermostat for TrueDRY	DR90A1000, DH150
50049536-008/U	Styrofoam Assembly with Tape	DR90A1000
50049537-001/U	Compressor overload	DR65A1000
50049537-002/U	Compressor relay, DPDT 24 VAC, 30A	DR65
50049537-003/U	Compressor Run capacitor, 35 MFD	DR65
50049537-004/U	8 in. Duct Collar	DR65
50049537-005/U	DR65 Filter	DR65
50049537-006/U	TrueDRY Blower Motor	DR65, DR90A2000 with date code up to K12XXXXX
DR90XFAN1/U	TrueDRY Blower Motor	DR90A2000 with date code L12XXXXX and beyond.
50049537-007/U	Defrost Thermostat for TrueDRY	DR65A1000
50070171-001/U	Compressor Run Capacitor	DR90A2000
50070171-002/U	TrueDRY Filter	DR90A2000, DR120
50070171-003/U	TrueDRY Magnetic door, black	DR90A2000, DR120
50070204-001/U	TrueDRY Fan Capacitor	DR65A2000, DR90A2000 with date code up to K12XXXXX
DR90XCFA1/U	TrueDRY Fan Capacitor	DR90A2000 with date code L12XXXXX and beyond
50070204-002/U	Defrost Thermostat for TrueDRY	DR65, DR90, DR120
50070205-001/U	Compressor Run Capacitor	DR120 with date code up to K12XXXXX
DR120XCRC1/U	Compressor Run Capacitor	DR120A2000 with date code L12XXXXX and beyond
50070205-002/U	TrueDRY Blower Motor	DR120
50070205-003/U	TrueDRY Fan Capacitor	DR120