POWER BLOCK TYPES

POWER BLOCK TYPE	PAGE #	DESCRIPTION	IMAGE
BULK FASTENING (BFPB)	6	The BFPB Series is a single pole design that consists of a series of stud fasteners to allow you to terminate various combinations of crimp lugs or flexible bus bar with one configuration. The series is ideal for use with flexible stranded wire terminations or large and abnormal wiring combinations.	
ENCLOSED (EPB)	7	The EPB Series are enclosed versions of our traditional power block configurations. This series consists of a modular single pole design that provides touch proof protection for splicer and distribution connector styles.	
SPLICER & DISTRIBUTION	9	Splicer and distribution power blocks are our traditional NEMA® style offering. Splicer power blocks provide the same number of wire inputs as outputs, and distribution power blocks provide multiple load outputs per each incoming wire.	
HIGH VOLTAGE (HVPB)	15	The HVPB series are high voltage (1500 AC/DC) versions of our traditional power block configurations. This series consists of a modular single pole design for splicer, distribution and studded connector styles.	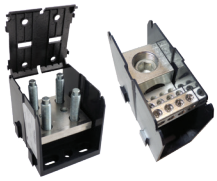
STUD CONFIGURATIONS	17	Studded power blocks are part of our traditional NEMA style offering. These power blocks provide studs, or a combination of bare wire terminals with the stud to terminate crimp lugs or bus bar to distribute power.	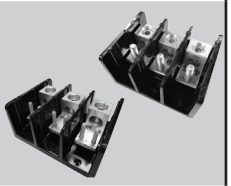
MISCELLANEOUS CONFIGURATIONS	20	Miscellaneous power blocks are part of our traditional NEMA style offering. These power blocks provide tapped holes or quick-connects in addition to bare wire terminals to splice or distribute power.	

STANDARDS:

Regal's Marathon® Special Products power blocks are either UL recognized or listed. Most have either CSA certification or cUR recognition for Canadian customers, as well as compliance to CE (Component IEC 60947-7-1).

RECOGNIZED power terminal blocks comply to UL 1059 and CSA C22.2 No. 158. All of our power blocks meet the 600V spacing requirements for application classes B & C and some Class A (135s): See General Information (pg 4) for class descriptions.

LISTED power distribution blocks comply to UL 1953. These are all rated 600V and are intended to be used on the load side of service equipment in accordance with the National Electrical Code, NFPA 70. Listed power blocks provide feeder circuit terminal spacing requirements of UL508A.

NEMA is a trademark of National Electrical Manufacturers Association. All Rights Reserved.

BULK FASTENING

ELECTRICAL:

1605 amps
1000 volts AC/DC (cULus)
High SCCRs:
- 100kA with fusing
- 35kA standard (no OCPD)

Flexible stranded wire compliant
Multiple wire ratings

STANDARDS:

UL 1059 recognized file no. XCFR2.E62806
cUR recognized file no. XCFR8.E62806 (UL 1059)
RoHS compliant

WEBSITE RESOURCES:

Detailed product data sheets
- Material information
- Termination & mounting specifications
- Detailed SCCR information

Dimensional drawings & 3D CAD files
Accessories available

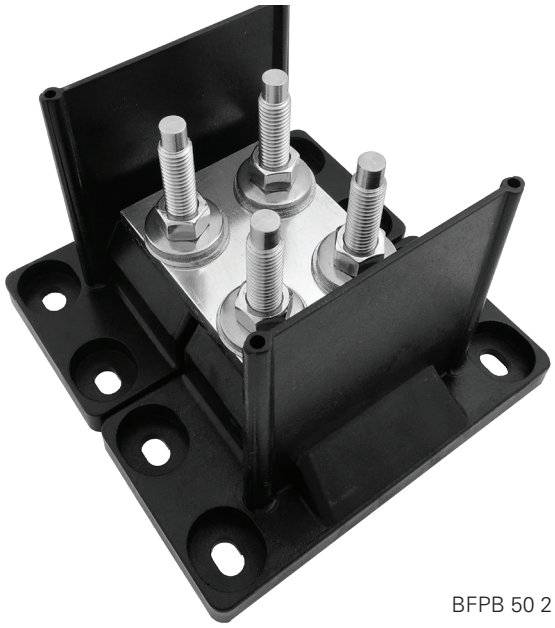

BFPB 50 2 2

CATALOG #	STUD POSITIONS	STUD SIZE	DIMENSIONS (INCHES)				COVER PART #
			PITCH	LENGTH	WIDTH	HEIGHT	
BFPB 50 2 2	2	1/2	2.125	7.14	6.89	4.99	CC BFPB 2 2
BFPB 50 2 3	3	1/2	2.125	9.27	6.89	4.99	CC BFPB 2 3
BFPB 50 2 4	4	1/2	2.125	11.39	6.89	4.99	CC BFPB 2 4
BFPB 50 2 5	5	1/2	2.125	13.52	6.89	4.99	CC BFPB 2 5
BFPB 50 2 6	6	1/2	2.125	15.64	6.89	4.99	CC BFPB 2 6
BFPB 37 1 3	3	3/8	1.625	8.27	6.89	4.99	CC BFPB 1 3
BFPB 37 1 4	4	3/8	1.625	9.89	6.89	4.99	CC BFPB 1 4
BFPB 37 1 5	5	3/8	1.625	11.52	6.89	4.99	CC BFPB 1 5
BFPB 37 1 6	6	3/8	1.625	13.14	6.89	4.99	CC BFPB 1 6

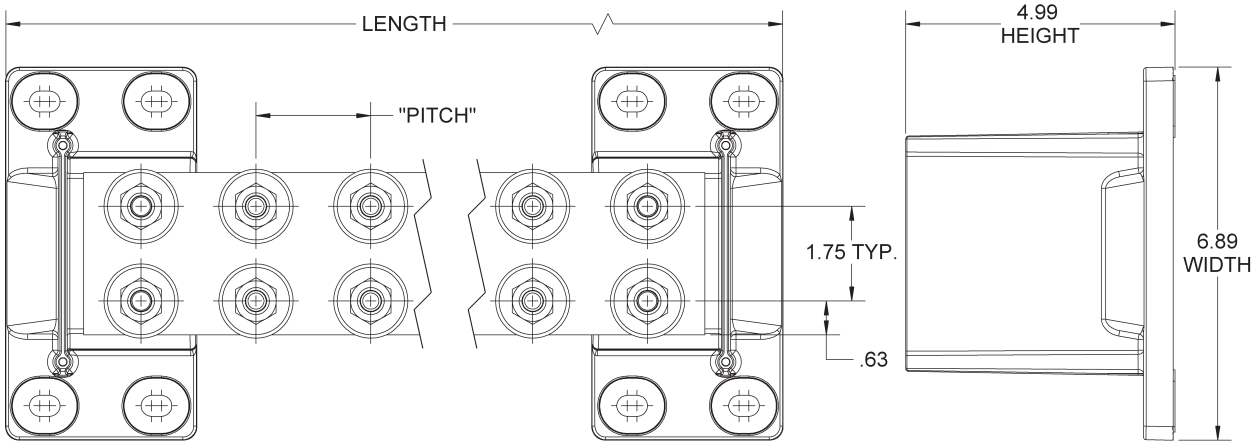

ENCLOSED - SPLICER/DISTRIBUTION

ELECTRICAL:

115 to 760 amps
600 volts AC/DC (UL)
High SCCRs (35 to 100kA) with fusing or circuit breakers
Flexible stranded wire compliant
Multiple wire ratings

STANDARDS:

UL 1953 listed - or - UL 1059 recognized
- Listed file no. QPQS.E309401
- Recognized file no. XCFR2.E62806

CSA certified file no. LR19766 (CSA C22-2 No. 158)
CE (Component IEC 60947-7-1)
RoHS compliant (All)

WEBSITE RESOURCES:

Detailed product data sheets
- Material information
- Termination & mounting specifications
- Multiple wire rating specifications
- Detailed SCCR information

Dimensional drawings & 3D CAD files
Accessories available

EPBAP48

AMPS	CATALOG #	MOUNTING STYLE	MAX SCCR	CONNECTOR MATERIAL	LINE SIDE		LOAD SIDE		FEEDER CIRCUIT COMPLIANT PER UL508
					WIRE RANGE AWG/kcmil	CONNECTOR OPENINGS/ POLE	WIRE RANGE AWG/kcmil	CONNECTOR OPENINGS/ POLE	
115	EPBAD21	DIN/ Panel	100,000	AL	#2 - #14	1	#2 - #14	1	Yes
115	EPBAD24	DIN/ Panel	65,000	AL	#2 - #14	1	#10 - #18	4	Yes
200	EPBAD42	DIN	100,000	AL	3/0 - #14	1	3/0 - #14	1	Yes
200	EPBAP42	Panel	100,000	AL	3/0 - #14	1	3/0 - #14	1	Yes
200	EPBCD42	DIN	100,000	CU	3/0 - #14	1	3/0 - #14	1	Yes
200	EPBCP42	Panel	100,000	CU	3/0 - #14	1	3/0 - #14	1	Yes

ENCLOSED - SPLICER/DISTRIBUTION

AMPS	CATALOG #	MOUNTING STYLE	MAX SCCR	CONNECTOR MATERIAL	LINE SIDE		LOAD SIDE		FEEDER CIRCUIT COMPLIANT PER UL508
					WIRE RANGE AWG/kcmil	CONNECTOR OPENINGS/ POLE	WIRE RANGE AWG/kcmil	CONNECTOR OPENINGS/ POLE	
200	EPBAD45	DIN	100,000	AL	3/0 - #14	1	#2 - #14	4	Yes
200	EPBAP45	Panel	100,000	AL	3/0 - #14	1	#2 - #14	4	Yes
200	EPBCD45	DIN	100,000	CU	3/0 - #14	1	#2 - #14	4	Yes
200	EPBCP45	Panel	100,000	CU	3/0 - #14	1	#2 - #14	4	Yes
200	EPBAP48	Panel	100,000	AL	3/0 - #14	1	#6 - #14 #2 - #14	8	Yes
200	EPBAD48	DIN	100,000	AL	3/0 - #14	1	#6 - #14 #2 - #14	8	Yes
335	EPBAD74	DIN	10,000	AL	400 - #6/ 2/0 - #14	1/1	#2 - #14	8	--
335	EPBAP74	Panel	100,000	AL	400 - #6/ 3/0 - #14	1/1	#2 - #14	8	--
335	EPBCD74	DIN	10,000	CU	400 - #6/ 3/0 - #14	1/1	#2 - #14	8	--
335	EPBCP74	Panel	100,000	CU	400 - #6/ 3/0 - #14	1/1	#2 - #14	8	--
510	EPBAD71	DIN	10,000	AL	250 - #6	2	250 - #6	2	--
510	EPBAP71	Panel	100,000	AL	250 - #6	2	250 - #6	2	--
510	EPBCD71	DIN	10,000	CU	250 - #6	2	250 - #6	2	--
510	EPBCP71	Panel	100,000	CU	250 - #6	2	250 - #6	2	--
760	EPBAP81	Panel	100,000	AL	500 - #4	2	500 - #4	2	Yes
760	EPBAP84	Panel	100,000	AL	500 - #4	2	2/0 - #14	8	Yes
760	EPBCP84	Panel	100,000	CU	500 - #4	2	2/0 - #14	8	Yes
760	EPBAP86	Panel	100,000	AL	500 - #4	2	#4 - #14	12	Yes

SPLICER/DISTRIBUTION

ELECTRICAL:

60 to 2280 amps
600 volts AC/DC (UL)
High SCCRs (35 to 100kA) with fusing or circuit breakers
Flexible stranded wire compliant
Multiple wire ratings

STANDARDS:

UL 1953 listed - or - UL 1059 recognized
- Listed file no. QPQS.E309401
- Recognized file no. XCFR2.E62806

CSA certified file no. LR19766 (CSA C22-2 No. 158)
CE (Component IEC 60947-7-1)
RoHS compliant (All)

WEBSITE RESOURCES:

Detailed product data sheets
- Material information
- Termination & mounting specifications
- Multiple wire rating specifications
- Detailed SCCR information

Dimensional drawings & 3D CAD files
Accessories available

1413400

1333595CH

ORDERING CODE:

SERIES	POLES	INDENTIFIER	COVER OPTION
XXX	X	XXX	XX
		Random 3-digit Identifier	Blank = No Cover CH = Snap-On (Hinge) Cover Attached

SERIES	POLES (x)	DIMENSIONS (INCHES) 3-POLE			COVER TYPE AVAILABLE *
		WIDTH	LENGTH	HEIGHT	
132	0/1/2/3	2.54	3.00	2.42	SNAP-ON
133	1/2/3	5.36	4.00	3.33	SNAP-ON
134	3	5.64	5.00	3.92	SNAP-ON
135	1/2/3	10.08	5.73	4.77	SNAP-ON
140	2/3	5.38	2.90	2.06	SCREW-ON
141	1/2/3/4	2.12	2.29	1.62	SNAP-ON
142	1/2/3	2.75	2.88	1.78	SCREW-ON
143	1/2/3	5.00	4.00	2.61	SCREW-ON
144	1/2/3	6.03	4.75	2.91	SCREW-ON
145	1/2/3	8.54	5.5	3.13	SCREW-ON

*Covers can be found on Page 21

SPLICER/DISTRIBUTION

AMPS	CATALOG #	POLES (x)	MATERIAL		LINE SIDE		LOAD SIDE		FEEDER CIRCUIT COMPLIANT PER UL508
			INSULATOR	CONN.	WIRE RANGE AWG/kcmil	CONNECTOR OPENINGS/ POLE	WIRE RANGE AWG/kcmil	CONNECTOR OPENINGS/ POLE	
60	141x403	1/2/3/4	Thermo-Plastic	AL	#2 - #14	1	#10 - #18	2	--
115	141x300	1/2/3/4	Thermo-Plastic	AL	#2 - #14	1	#2 - #14	1	--
115	142x552	1/2/3	Phenolic	AL	#2 - #14	1	#2 - #14	1	--
115	141x400	1/2/3/4	Thermo-Plastic	AL	#2 - #14	1	#10 - #18	4	--
150	142x121	1/2/3	Phenolic	CU	1/0 - #14	1	1/0 - #14	1	--
175	132x572	0/1/2/3	Thermo-Plastic	AL	2/0 - #14	1	2/0 - #14	1	--
175	142x572	1/2/3	Phenolic	AL	2/0 - #14	1	2/0 - #14	1	--
175	132x972	1/2/3	Thermo-Plastic	CU	2/0 - #14	1	2/0 - #14	1	--
175	132x570	0/1/2/3	Thermo-Plastic	AL	2/0 - #14	1	#4 - #14	4	--
175	142x570	1/2/3	Phenolic	AL	2/0 - #14	1	#4 - #14	4	--
175	132x580	0/1/2/3	Thermo-Plastic	AL	2/0 - #14	1	#4 - #14	6	--
175	140x402	2/3	Phenolic	AL	2/0 - #14	1	#4 - #14	4	--
175	140x401	2/3	Phenolic	AL	2/0 - #14	1	#4 - #14	6	--
175	132x970	0/1/2/3	Thermo-Plastic	CU	2/0 - #14	1	#4 - #14	4	--
175	142x970	1/2/3	Phenolic	CU	2/0 - #14	1	#4 - #14	4	--
175	1343580	3	Thermo-Plastic	AL	2/0 - #14	1	#4 - #14	6	Yes
200	1343570	3	Thermo-Plastic	AL	3/0 - #14	1	#2 - #14	4	Yes
200	1343572	3	Thermo-Plastic	AL	3/0 - #14	1	3/0 - #14	1	Yes

SPLICER/DISTRIBUTION

AMPS	CATALOG #	POLES (x)	MATERIAL		LINE SIDE		LOAD SIDE		FEEDER CIRCUIT COMPLIANT PER UL 508
			INSULATOR	CONN.	WIRE RANGE AWG/kcmil	CONNECTOR OPENINGS/POLE	WIRE RANGE AWG/kcmil	CONNECTOR OPENINGS/POLE	
200	1343548	3	Thermo-Plastic	AL	3/0 - #14	1	#6 - #14 #2 - #14	8	Yes
255	143x123	1/2/3	Phenolic	AL	250 kcmil - #6	1	250 kcmil - #6	1	--
255	140x801	2/3	Phenolic	CU	250 - #6	1	250 - #6	1	--
310	140x303	2/3	Phenolic	AL	350 - #6	1	350 - #6	1	--
310	143x126	1/2/3	Phenolic	AL	350 - #6	1	350 - #6	1	--
310	133x126	1/2/3	Thermo-Plastic	AL	350 - #6	1	350 - #6	1	--
310	1343582	3	Thermo-Plastic	AL	350 - #6	1	350 - #6	1	Yes
310	140x404	2/3	Phenolic	AL	350 - #6	1	#4 - #14	6	--
310	133x554	1/2/3	Thermo-Plastic	AL	350 - #6	1	2/0 - #14	2	--
310	140x410	2/3	Phenolic	AL	350 - #6	1	2/0 - #14	2	--
310	143x554	1/2/3	Phenolic	AL	350 - #6	1	2/0 - #14	2	--
310	133x324	1/2/3	Thermo-Plastic	AL	350 - #6	1	#8 - #14	24	--
335	144x401	1/2/3	Phenolic	AL	400 - #6	1	#2 - #14	6	--
335	143x552	1/2/3	Phenolic	AL	400 - #6	1	#2 - #14	4	--
335	143x553	1/2/3	Phenolic	AL	400 - #6	1	#2 - #14	6	--
335	1343553	3	Thermo-Plastic	AL	400 - #6	1	#2 - #14	6	Yes
335	144x560	1/2/3	Phenolic	AL	400 - #6	1	#2 - #14	8	--
335	133x552	1/2/3	Thermo-Plastic	AL	400 - #6	1	#2 - #14	4	--
350	133x305	1/2/3	Thermo-Plastic	AL	2/0 - #14	2	2/0 - #14	2	--

SPLICER/DISTRIBUTION

AMPS	CATALOG #	POLES (x)	MATERIAL		LINE SIDE		LOAD SIDE		FEEDER CIRCUIT COMPLIANT PER UL 508
			INSULATOR	CONN.	WIRE RANGE AWG/kcmil	CONNECTOR OPENINGS/ POLE	WIRE RANGE AWG/kcmil	CONNECTOR OPENINGS/ POLE	
350	143x306	1/2/3	Phenolic	AL	2/0 - #14	2	2/0 - #14	2	--
350	143x555	1/2/3	Phenolic	AL	2/0 - #14	2	#4 - #14	6	--
350	133x555	1/2/3	Thermo-Plastic	AL	2/0 - #14	2	#4 - #14	6	--
350	1343555	3	Thermo-Plastic	AL	2/0 - #14	2	#4 - #14	6	Yes
350	143x955	1/2/3	Phenolic	CU	2/0 - #14	2	#4 - #14	6	--
350	133x955	1/2/3	Thermo-Plastic	CU	2/0 - #14	2	#4 - #14	6	--
380	143x953	1/2/3	Phenolic	CU	500 - #4	1	#2 - #14	6	--
380	133x953	1/2/3	Thermo-Plastic	CU	500 - #4	1	#2 - #14	6	--
380	144x551	1/2/3	Phenolic	AL	500 - #4	1	#2 - #14	6	--
380	145x579	1/2/3	Phenolic	AL	500 - #4	1	#2/0 - #14	6	--
380	133x587	1/2/3	Thermo-Plastic	AL	500 - #4	1	#2 - #14 350 - #6	3/1	--
380	143x587	1/2/3	Phenolic	AL	500 - #4	1	#2 - #14 350 - #6	3/1	--
380	145x594	1/2/3	Phenolic	AL	500 - #4	1	#2 - #14	8	--
380	145x552	1/2/3	Phenolic	AL	500 - #4	1	#2 - #14	12	--
420	144x557	1/2/3	Phenolic	AL	600 - #4	1	600 - #4	1	--
420	133x360	1/2/3	Thermo-Plastic	AL	600 - #2	1	600 - #2	1	--
420	133x588	1/2/3	Thermo-Plastic	AL	600 - #2	1	#2 - #14 1/0 - #14	6/3	--
420	1343588	3	Thermo-Plastic	AL	600 - #2	1	#2 - #14 1/0 - #14	6/3	Yes
420	133x595	1/2/3	Thermo-Plastic	AL	600 - #2	1	#4 - #14	12	--

SPLICER/DISTRIBUTION

AMPS	CATALOG #	POLES (x)	MATERIAL		LINE SIDE		LOAD SIDE		FEEDER CIRCUIT COMPLIANT PER UL 508
			INSULATOR	CONN.	WIRE RANGE AWG/kcmil	CONNECTOR OPENINGS/ POLE	WIRE RANGE AWG/kcmil	CONNECTOR OPENINGS/ POLE	
420	1343595	3	Thermo-Plastic	AL	600 - #2	1	#4 - #14	12	Yes
420	133x585	1/2/3	Thermo-Plastic	AL	600 - #2	1	#2 - #14	8	--
420	1343585	3	Thermo-Plastic	AL	600 - #2	1	#2 - #14	8	Yes
420	133x575	1/2/3	Thermo-Plastic	AL	600 - #2	1	2/0 - #14	4	--
420	133x565	1/2/3	Thermo-Plastic	AL	600 - #2	1	250 - #6	2	--
420	135x601	1/2/3	Thermo-Plastic	AL	600 - #2	1	#6 - #14	24	--
475	135x701	1/2/3	Thermo-Plastic	AL	750 - 1/0	1	750 - 1/0	1	Yes[1]
510	133x320	1/2/3	Thermo-Plastic	AL	250 - #6	2	250 - #6	2	--
510	133x596	1/2/3	Thermo-Plastic	AL	250 - #6	2	#4 - #14	12	--
510	1343596	3	Thermo-Plastic	AL	250 - #6	2	#4 - #14	12	Yes
510	133x597	1/2/3	Thermo-Plastic	AL	250 - #6	2	#2 - #14	8	--
510	1343597	3	Thermo-Plastic	AL	250 - #6	2	#2 - #14	8	Yes
510	133x598	1/2/3	Thermo-Plastic	AL	250 - #6	2	2/0 - #14	4	--
620	145x129	1/2/3	Phenolic	AL	350 - #4	2	350 - #4	2	--
620	1331348	1	Thermo-Plastic	AL	350 - #4	2	#8 - #14	48	--
760	145x301	1/2/3	Phenolic	AL	500 - #4	2	500 - #4	2	--
760	145x592	1/2/3	Phenolic	AL	500 - #4	2	#4 - #14	12	--
760	145x586	1/2/3	Phenolic	AL	500 - #6	2	2/0 - #14	8	--

SPLICER/DISTRIBUTION

AMPS	CATALOG #	POLES (x)	MATERIAL		LINE SIDE		LOAD SIDE		FEEDER CIRCUIT COMPLIANT PER UL 508
			INSULATOR	CONN.	WIRE RANGE AWG/kcmil	CONNECTOR OPENINGS/ POLE	WIRE RANGE AWG/kcmil	CONNECTOR OPENINGS/ POLE	
760	145x992	1/2/3	Phenolic	CU	500 - #4	2	#2 - #14	12	
760	145x986	1/2/3	Phenolic	CU	500 - #4	2	2/0 - #14	8	--
760	145x408	1/2/3	Phenolic	AL	500 - #6	2	#2 - #14	12	--
840	145x411	1/2/3	Phenolic	AL	600 - #2	2	3/0 - #6 #4 - #14	4/4	--
950	135x605	1/2/3	Thermo-Plastic	AL	600 - #2	2	350 - #6	4	--
950	135x702	1/2/3	Thermo-Plastic	AL	750 - 1/0	2	750 - 1/0	2	Yes[1]
950	135x703	1/2/3	Thermo-Plastic	AL	750 - 1/0	2	250 - #6	6	Yes[1]
950	135x704	1/2/3	Thermo-Plastic	AL	750 - 1/0	2	2/0 - #14	10	Yes[1]
950	135x705	1/2/3	Thermo-Plastic	AL	750 - 1/0	2	#2 - #14 250 - #6	12/3	Yes[1]
950	135x706	1/2/3	Thermo-Plastic	AL	750 - 1/0	2	#2 - #14 250 - #6	4/5	Yes[1]
950	135x707	1/2/3	Thermo-Plastic	AL	750 - 1/0	2	#2 - #14 3/0 - #6	12/4	Yes[1]
950	135x708	1/2/3	Thermo-Plastic	AL	750 - 1/0	2	3/0 - #6	8	Yes[1]
2280	1453401[2]	1	Phenolic	AL	500 - #4	6	2/0 - #14	18	--

(1) UL Listed when purchased without a cover (CH). When purchased with a cover, the product is UL Recognized to US and Canadian standards (cURus).

(2) Special 1-pole power block with the dimensions of a 3-pole 145 series power block.

HIGH VOLTAGE (1500V)

ELECTRICAL:

350 - 1500 amps
1500 volts AC/DC (UL)
Flexible stranded wire compliant
Multiple wire ratings

STANDARDS:

UL 1059 recognized file no. XCFR2.E62806
cUR recognized file no. XCFR8.E62806 (UL 1059)
RoHS compliant

WEBSITE RESOURCES:

Detailed product data sheets
- Material information
- Termination & mounting specifications
- Detailed SCCR information

Dimensional drawings & 3D CAD files
Accessories available

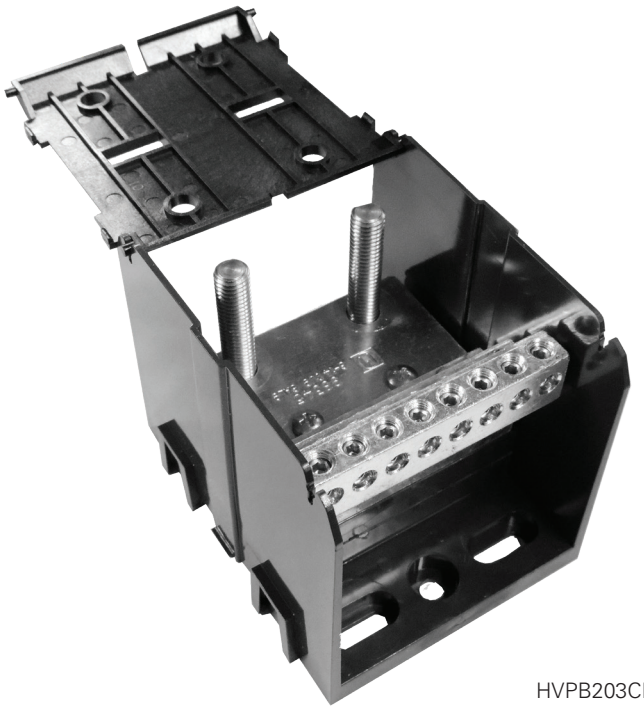

HVPB203CH

ORDERING CODE:

SERIES	IDENTIFIER	COVER OPTION
HVPB	XXX	XX
High Voltage Power Block	Random 3-digit Identifier	Blank = No Cover CH = Snap-On (Hinge) Cover Attached

AMPS	CATALOG #	POLES (x)	CONNECTOR TEMP RATING	MATERIAL		LINE SIDE		LOAD SIDE	
				INSULATOR	CONN.	WIRE RANGE AWG/kcmil	CONNECTOR OPENINGS/ POLE	WIRE RANGE AWG/kcmil	CONNECTOR OPENINGS/ POLE
350	HVPB105	1	90° C	Thermo-Plastic	AL	Stud, M10	1	#10 - #14[a]	24
420	HVPB108	1	75° C	Thermo-Plastic	AL	600 - #2	1	#4 - #14	12
420	HVPB109	1	75° C	Thermo-Plastic	AL	600 - #2	1	600 - #2	1
430	HVPB101	1	90° C	Thermo-Plastic	AL	Stud, M10	1	#6 - #14[b]	12

HIGH VOLTAGE (1500V)

AMPS	CATALOG #	POLES (x)	CONNECTOR TEMP RATING	MATERIAL		LINE SIDE		LOAD SIDE	
				INSULATOR	CONN.	WIRE RANGE AWG/kcmil	CONNECTOR OPENINGS/ POLE	WIRE RANGE AWG/kcmil	CONNECTOR OPENINGS/ POLE
430	HVPB103	1	90°C	Thermo-Plastic	AL	Stud, M10	1	#4 - #14[c]	8
430	HVPB107	1	90°C	Thermo-Plastic	CU	Stud, M10	1	Stud, M10	1
430	HVPB208	1	90°C	Thermo-Plastic	CU	Stud, 1/2-13 x 1.44"	1	Stud, 1/2-13 x 1.44"	1
750	HVPB112	1	90°C	Thermo-Plastic	CU	Stud, 3/8	1	Stud, 3/8	1
750	HVPB114	1	90°C	Thermo-Plastic	CU	Stud, 1/2	1	Stud, 1/2	1
760	HVPB210	1	75°C	Thermo-Plastic	AL	500 - #4	2	#2 - #14	12
760	HVPB211	1	75°C	Thermo-Plastic	AL	500 - #4	2	2/0 - #14	8
860	HVPB205	1	90°C	Thermo-Plastic	AL	Stud, M10	1	#4 - #14[c]	16
860	HVPB207	1	90°C	Thermo-Plastic	AL	Stud, M10	2	#4 - #14[c]	16
860	HVPB201	1	90°C	Thermo-Plastic	AL	Stud, M10	1	#6 - #14[b]	24
860	HVPB203	1	90°C	Thermo-Plastic	AL	Stud, M10	2	#6 - #14[b]	24
950	HVPB602	1	90°C	Thermo-Plastic	AL	600 - #2	2	600 - #2	2
1500	HVPB212	1	90°C	Thermo-Plastic	CU	Stud, 3/8	2	Stud, 3/8	2
1500	HVPB214	1	90°C	Thermo-Plastic	CU	Stud, 1/2	2	Stud, 1/2	2

(a) suitable for #8 AWG, limited to 40A per wire, copper only
(b) suitable for #4 AWG, limited to 75A per wire, copper only
(c) suitable for #2 AWG, limited to 95A per wire, copper; 75A per wire, aluminum

STUD CONFIGURATIONS

ELECTRICAL:

115 to 1680 amps
600 volts AC/DC (UL)
Flexible stranded wire compliant
Multiple wire ratings

STANDARDS:

UL 1059 recognized file no. XCFR2.E62806
CSA certified file no. LR19766 (CSA C22-2 No. 158)
CE (Component IEC 60947-7-1)
RoHS compliant (all)

WEBSITE RESOURCES:

Detailed product data sheets
- Material information
- Termination & mounting specifications
- Multiple wire rating specifications
- Detailed SCCR information

Dimensional drawings & 3D CAD files
Accessories available

1413203

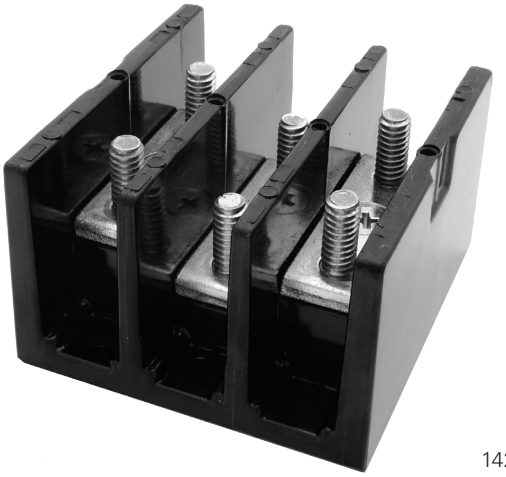

1423122

ORDERING CODE:

SERIES	POLES	INDENTIFIER	COVER OPTION
XXX	X	XXX	XX
		Random 3-digit Identifier	Blank = No Cover CH = Snap-On (Hinge) Cover Attached

SERIES	POLES (x)	DIMENSIONS (INCHES)			COVER TYPE AVAILABLE
		WIDTH	LENGTH	HEIGHT	
132	0/1/2/3	2.54	3.00	2.42	SNAP-ON
133	1/2/3	5.36	4.00	3.33	SNAP-ON
135	1/2/3	10.08	5.73	4.77	SNAP-ON
140	2/3	5.38	2.90	2.06	SCREW-ON
141	1/2/3/4	2.12	2.29	1.62	SCREW-ON
142	1/2/3	2.75	2.88	1.78	SCREW-ON
143	1/2/3	5.00	4.00	2.61	SCREW-ON
144	1/2/3	6.03	4.75	2.91	SCREW-ON
145	1/2/3	8.54	5.50	3.13	SCREW-ON

*Covers can be found on Page 21

STUD CONFIGURATIONS

AMPS	CATALOG #	POLES (x)	MATERIAL		LINE SIDE		LOAD SIDE	
			INSULATOR	CONN.	WIRE RANGE AWG/kcmil	CONNECTOR OPENINGS/ POLE	WIRE RANGE AWG/kcmil	CONNECTOR OPENINGS/ POLE
115	141x203	1/2/3/4	Thermo-Plastic	AL	#2 - #14	1	#10-32 X .60	1
175	132x574	0/1/2/3	Thermo-Plastic	AL	2/0 - #14	1	1/4-20 x .50	1
175	132x474	0/1/2/3	Thermo-Plastic	AL	2/0 - #14	1	M6 X 13	1
175	142x574	1/2/3	Phenolic	AL	2/0 - #14	1	1/4-20 X .50	1
175	143x590	1/2/3	Phenolic	AL	2/0 - #14	1	1/4-20 X 1.38	1
200	132x122	0/1/2/3	Thermo-Plastic	CU	1/4-20 X .56	1	1/4-20 X .56	1
200	132x422	0/1/2/3	Thermo-Plastic	CU	M6 X 15	1	M6 X 15	1
200	142x122	1/2/3	Phenolic	CU	1/4-20 X .56	1	1/4-20 X .56	1
230	143x563	1/2/3	Phenolic	CU	3/8-16 x 1.18	1	3/8-16 x 1.18	1
230	143x561	1/2/3	Phenolic	CU	3/8-16 x 1.18	1	1/4-20 x 1.38	1
230	144x553	1/2/3	Phenolic	CU	3/8-16 x 1.44	1	3/8-16 x 1.44	1
260	144x122	1/2/3	Phenolic	CU	3/8-16 x 1.44	1	1/4-20 X .56	2
310	133x564	1/2/3	Thermo-Plastic	CU	M10 x 30	1	M10 x 30	1
310	133x563	1/2/3	Thermo-Plastic	CU	3/8-16 x 1.18	1	3/8-16 x 1.18	1
310	143x559	1/2/3	Phenolic	AL	350 - #6	1	3/8-16 x 1.13	1
310	133x559	1/2/3	Phenolic	AL	350 - #6	1	3/8-16 x 1.25	1
310	133x558	1/2/3	Phenolic	AL	350 - #6	1	M10 x 30	1
360	145x573	1/2/3	Phenolic	CU	3/8-16 x 1.44	1	3/8-16 x 1.44	2
360	145x583	1/2/3	Phenolic	CU	3/8-16 x 1.44	1	1/4-20 x 1.44	2

STUD CONFIGURATIONS

AMPS	CATALOG #	POLES (x)	MATERIAL		LINE SIDE		LOAD SIDE	
			INSULATOR	CONN.	WIRE RANGE AWG/kcmil	CONNECTOR OPENINGS/ POLE	WIRE RANGE AWG/kcmil	CONNECTOR OPENINGS/ POLE
380	144x569	1/2/3	Phenolic	AL	500 - #4	1	1/4-20 x 1.06	2
380	144x575	1/2/3	Phenolic	AL	500 - #4	1	3/8-16 x 1.31	1
410	145x606	1/2/3	Phenolic	CU	1/2-13 x 1.44	1	1/2-13 x 1.44	1
410	133x611	1/2/3	Thermo-Plastic	CU	1/2-13 x 1.38	1	1/2-13 x 1.38	1
475	145x613	1/2/3	Phenolic	CU	3/8-16 x 1.44	2	3/8-16 x 1.44	1
510	133x272	1/2/3	Thermo-Plastic	AL	3/8-16 x 1.19	1	4 - #14	12
510	133x280	1/2/3	Thermo-Plastic	AL	3/8-16 x 1.19	1	#2 - #14	8
510	133x270	1/2/3	Thermo-Plastic	AL	3/8-16 x 1.19	1	2/0 - #14	4
760	145x282	1/2/3	Phenolic	AL	3/8-16 x 1.00	2	2/0 - #14	8
760	145x599	1/2/3	Phenolic	AL	500 - #4	2	3/8-16 x 1.31	2
760	145x610	1/2/3	Phenolic	AL	500 - #4	2	1/2-13 x 1.31	1
840	144x614	1/2/3	Phenolic	CU	3/8-16 x 1.00	1	3/8-16 x 1.00	1
1680	145x615	1/2/3	Phenolic	AL	600 - #4	4	1/2-13 x 1.56	1

MISC CONFIGURATIONS

ELECTRICAL:

115 to 200 amps
600 volts AC/DC (UL)
Flexible stranded wire compliant
Multiple wire ratings

STANDARDS:

UL 1059 recognized file no. XCFR2.E62806
CSA certified file no. LR19766 (CSA C22-2 No. 158)
CE (Component IEC 60947-7-1)
RoHS compliant (all)

WEBSITE RESOURCES:

Detailed product data sheets
- Material information
- Termination & mounting specifications
- Multiple wire rating specifications
- Detailed SCCR information

Dimensional drawings & 3D CAD files
Accessories available

1413202

1413301

AMPS	CATALOG #	POLES (x)	MATERIAL		LINE SIDE		LOAD SIDE	
			INSULATOR	CONN.	WIRE RANGE AWG/kcmil	CONNECTOR OPENINGS/ POLE	WIRE RANGE AWG/kcmil	CONNECTOR OPENINGS/ POLE
115	141x201	1/2/3/4	Thermo-Plastic	AL	#2 - #14	1	#10-32 Tapped Hole	1
115	141x202	1/2/3/4	Thermo-Plastic	AL	#2 - #14	1	1/4" Quick-connects (4)	4
115	141x205	1/2/3/4	Thermo-Plastic	AL	#2 - #14	1	1/4" Quick-connects (2) & #10-32 Tap	2/1
115	141x301	1/2/3/4	Thermo-Plastic	AL	#2 - #14	1	#2 - #14 & 1/4" Quick-connect (1)	1/1
175	142x553	1/2/3	Phenolic	AL	2/0 - #14	1	1/4 - 20 Tapped Hole	1
175	132x579	1/2/3	Thermo-Plastic	AL	2/0 - #14	1	2/0 - #14 & (1) Quick-connect	1/1
175	132x670	1/2/3	Thermo-Plastic	AL	2/0 - #14	1	#4 - #14 & (1) Quick-connect	4/1
200	142x123	1/2/3	Phenolic	CU	1/4-20 Screw	1	1/4 - 20 Screw	1

COVERS

SERIES	TYPE	CATALOG # (replace x with # of poles)	POLES (x)	FIGURE #
132	SNAP-ON	CH132x	1/2/3	3
133	SNAP-ON	CH133x	1/2/3	3
134	SNAP-ON	CH1343	3	4
135	SNAP-ON	CH1351	1	5
140	SCREW-ON	CC140x	2/3	1
141	SNAP-ON	CC141x	1/2/3/4	2
142	SCREW-ON	CC142x	1/2/3	1
143	SCREW-ON	CC143x	1/2/3	1
144	SCREW-ON	CC144x	1/2/3	1
145	SCREW-ON	CC145x	1/2/3	1
HVPB1	SNAP-ON	CH1331	1	5
HVPB2	SNAP-ON	CH1332	1	5

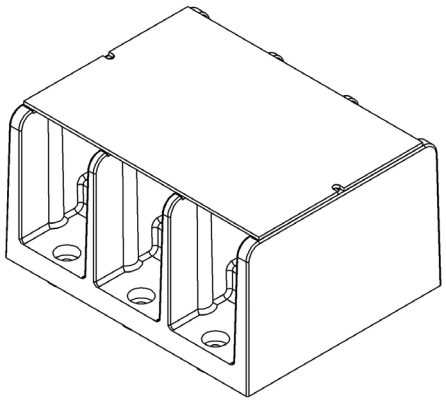

FIGURE 1

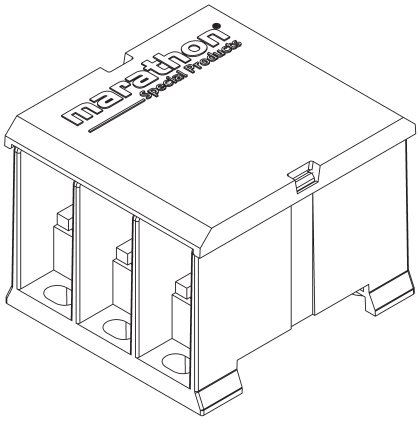

FIGURE 2

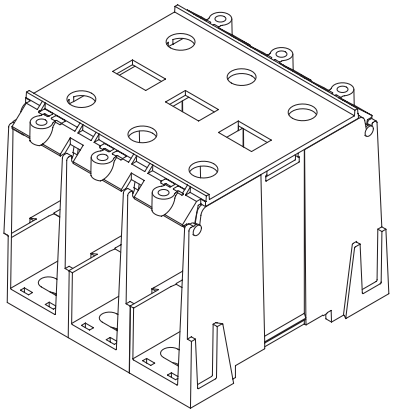

FIGURE 3

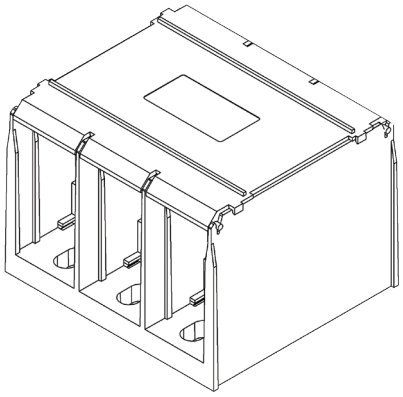

FIGURE 4

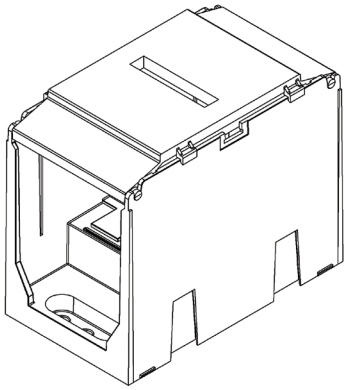

FIGURE 5