11938KA (119□ x 38L)

Legacy Part No. 4715KL

General Specifications

Motor Protection:
Auto Restart/Polarity Protection

Insulation Resistance:
10M Ω or over with a DC500V Megger

Dielectric Withstand Voltage: AC 700V 1s

Allowable Ambient Temperature Range:

N Class:	-10°C ~ +40°C (Operating)
L ~ M Class:	-10°C ~ +70°C (Operating)
L ~ M Class:	-40°C ~ +70°C (Storage)
N Class:	-40°C ~ +60°C (Storage)

(non-condensing environment)

Expected Life

Failure Rate: 10%
25°C 100,000 Hours

Material

Casing : Plastic (Black) UL94V-0
Impeller : Plastic (Black) UL94V-0
Bearing : Ball Bearing
Lead Wire : UL1007, AWG24, +Red, -Black

Panel Cut-Outs

Units: inch (mm)

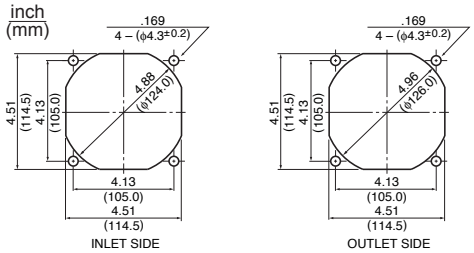

Characteristic Curves

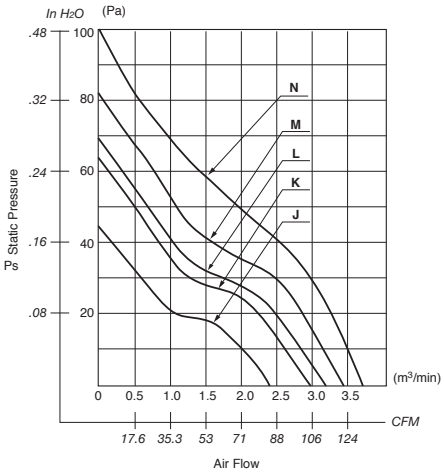

Outline

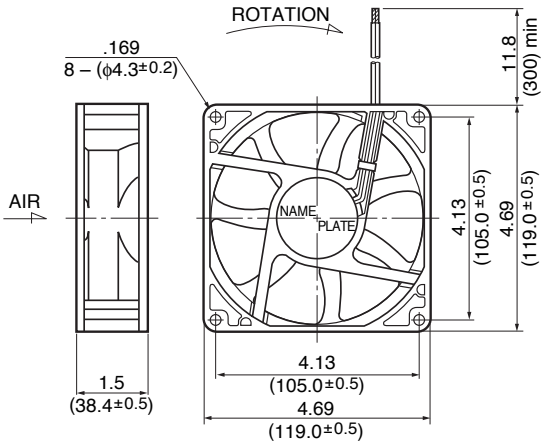

Specifications

MODEL	LEGACY P/N	Rated Voltage	Operating Voltage	Current	Input Power	Speed	Max. Air Flow		Max. Static Pressure		Noise	Mass
		(V)	(V)	(A)*1	(W)*1	(min-1)*1	CFM*1	(m3/min)*1	in H2O	(Pa)*1	(dB)*1	(g)
11938KA-12J-EA-00	4715KL-04W-B10-E00	12	6.0 ~ 13.8	0.27	3.24	2300	83.6	2.37	.17	44.1	37.0	260
11938KA-12K-EA-00	4715KL-04W-B20-E00	12	6.0 ~ 13.8	0.40	4.80	2650	97.0	2.75	.22	55.9	41.0	260
11938KA-12L-EA-00	4715KL-04W-B30-E00	12	6.0 ~ 13.8	0.55	6.60	2950	108.0	3.07	.27	68.2	42.5	260
11938KA-12M-EA-00	4715KL-04W-B40-E00	12	6.0 ~ 13.8	0.70	8.40	3200	118.0	3.34	.33	81.4	46.5	260
11938KA-12N-EA-00	4715KL-04W-B50-E00	12	9.5 ~ 12.6	1.00	12.00	3600	129.9	3.68	.44	110.0	50.0	260
11938KA-24J-EA-00	4715KL-05W-B10-E00	24	10.0 ~ 27.6	0.15	3.60	2300	83.6	2.37	.17	44.1	37.0	260
11938KA-24K-EA-00	4715KL-05W-B20-E00	24	10.0 ~ 27.6	0.21	5.04	2650	97.0	2.75	.22	55.9	41.0	260
11938KA-24L-EA-00	4715KL-05W-B30-E00	24	10.0 ~ 27.6	0.31	7.44	2950	108.0	3.07	.27	68.2	42.5	260
11938KA-24M-EA-00	4715KL-05W-B40-E00	24	10.0 ~ 27.6	0.35	8.40	3200	118.0	3.34	.33	81.4	46.5	260
11938KA-24N-EA-00	4715KL-05W-B50-E00	24	18.0 ~ 25.0	0.50	12.00	3600	130.0	3.68	.44	110.0	50.0	260
11938KA-48J-EA-00	4715KL-07W-B10-E00	48	25.0 ~ 55.2	0.08	3.84	2300	83.6	2.37	.17	44.1	37.0	260
11938KA-48K-EA-00	4715KL-07W-B20-E00	48	25.0 ~ 55.2	0.11	5.28	2650	97.0	2.75	.22	55.9	41.0	260
11938KA-48L-EA-00	4715KL-07W-B30-E00	48	25.0 ~ 55.2	0.16	7.68	2950	108.0	3.07	.27	68.2	42.5	260
** 11938KA-48M-EA-00	4715KL-07W-B40-E00	48	25.0 ~ 55.2	0.20	9.60	3200	118.0	3.34	.33	81.4	46.5	260
11938KA-48N-EA-00	4715KL-07W-B50-E00	48	30.0 ~ 60.0	0.16	7.68	3600	130.0	3.68	.44	110.0	50.0	260

Rotation: Clockwise Airflow Outlet: Air Out Over Struts *1: Average Values in Free Air Note: PWM/Locked Rotor/Tach Available

** Contact NMB for availability